CEAN
filtration devices

TECHNICAL CATALOGUE
2027 EDITION

Industrial filtration

Filter cartridges, panels and elements for air filtration.



OVER 45 YEARS

of experience in dust collection

www.ceanfiltri.it

Catalogue index

The company 7

Air filtration | Temperatures and materials 8

Filter media | Cellulose and polyester 9

Filter media | Specialty media 10

Filter media | Antistatic and high-temperature media 11

Filter element coding 12

B122 / B128 / B133 / B135 / B140…	Filter cartridges for tubesheet mounting	**13**
B154	Filter cartridges for tubesheet mounting	**14**
C1 / C2 / C4 / C5 / C6…	Cartridges with 3-hook plastic flange	**15**
C1F / C2F / C4F / C5F / C6F	Cartridges with 3-hook aluminium flange	**16**
C1C / C2C / C4C / C1CF / C2CF / C4CF	Conical cartridge with 3-hook flange	**17**
C1X / C2X	Additional inner cartridge, 3-hook flange	**18**
CS	Ø145 mm quick-release cartridge	**19**
D1 / D2 / D3 / D4 / D5	Cartridge with internal press-fit mounting	**20**
DW.500 / DW.750 / DW.900	Aftermarket cartridge for WAM KFEC / WAMECO	**21**
DN.750 / DN.950	Aftermarket filter panel for Dantherm	**22**

F1 / F2 / FX2 / F3 / F4	Cartridge with 4-hook plastic flange	**23**
F1F / F2F / F3F	Cartridge with 4-hook aluminium flange	**24**
E1 / E2 / E3 / E4 / E5…	Top-mounted cartridge with plastic flange	**25**
E4F / E7F / E8F / E9F / E10F…	Top-mounted cartridge with metal flange	**26**
EC2 / EC3 / ECX3 / EC4 / EC5…	Top-mounted conical cartridge, plastic flange	**27**
EC2F / EC3F / EC4F / EC5F	Top-mounted conical cartridge, steel flange	**28**
L1 / L2 / L3	Cartridge with dirty-side mounting flange	**29**
M1 / M2 / M3 / M4	Open/closed, plastic flange and steel end cap	**30**
MR1 / MR2 / MR3 / MR4	Open/closed, inner and outer mesh, flange in plastic	**31**
M5F / M6F / M7F / M8F	Galvanised steel flange, end cap and inner mesh	**32**
MR5F / MR6F / MR7F / MR8F	Open/closed, dual mesh, steel flange and end cap	**33**
MA1 / MA2 / MA3 / MA4	Open/open, inner mesh and plastic flange	**34**
MRA1 / MRA2 / MRA3 / MRA4	Open/open, dual mesh and plastic flange	**35**
MA5F / MA6F / MA7F / MA8F	Open/open, inner mesh and galvanised steel flanges	**36**
MRA5F / MRA6F / MRA7F / MRA8F	Open/open, dual mesh and steel flanges	**37**
MZ / MAZ	Aftermarket Mahle replacement, 324 mm flange	**38**

NG1 / NG2 / NG3	Cartridge with Ecotex-style quick-release flange	**39**
NH	Cartridge with quick-release flange	**40**
NP1 / NP2	Cartridge with quick-release bayonet flange	**41**
OV.660 / OV.750 / OVR.660 / OVR.750	Aftermarket oval cartridge for Donaldson	**42**
R1 / R2 / R3 / R4	Cylindrical cartridge with threaded flange	**43**
RC2 / RC3	Conical cartridge with threaded flange	**44**
S1 / RWR1 / RWR2 / RWR3 / RWS1	Cartridge with male threaded flange	**45**
SW.500 / SW.750 / SW.900	Aftermarket cartridge for WAM KFES / WAMECO	**46**
WP	Aftermarket cartridge for WAM KFNC / WAMFLO / HOPPERTOP	**47**
ULM	Aftermarket cartridge for Ulmatec	**48**
HUA	Aftermarket cartridge for Jinan Huaxin	**49**
VP	Aftermarket cartridge for Dantherm	**50**
ZEPP/ZEPG	Aftermarket conical cartridge for Zeppeling	**51**
X2	Aftermarket cartridge for TS-Filtersystem	**52**

IN / FCC52	Aftermarket for Plymovent / Lincoln Electric	**53**
IN / FCC52	Aftermarket for Atlas Copco, ref. 2653254470	**54**
FCC150	Aftermarket for Plymovent / Lincoln Durafilter	**55**
FCC30	Aftermarket for Plymovent / Lincoln Durafilter	**56**
TRX	Double-conical cartridge	**57**
MT1 / MT2	Cartridge with six-bolt mounting	**58**
FCC50	Aftermarket for Plymovent / Lincoln	**59**
HS1 / HS2 / HS3 / HS4 / HS5	Vertical mounting with upper flange	**60**
HSE	Aftermarket for Farr Gold Series	**61**

Polygonal filter elements	Industrial dust collection solutions	**62**
K.550 / K.750 / K.950	Aftermarket for WAM SILOTOP	**63**
PAP.1045 / PAP.1200	Aftermarket for Trumpf / Herding	**64**
PAT1.600 / PAT4.890 / PAT5.950 / PAT5.1260	Aftermarket for Trumpf / Camfil / Keller	**65**
PAT1 / PAT2 / PAT3 / PAT6 / PAT8	Aftermarket for Donaldson Unicell / Excel Style	**66**
PAT3X.1000 / PAT4X.1225 / PAT9.1000 / PAT9.1255	Aftermarket polygonal panel for Vanterm	**67**
PAF1.1045	Aftermarket polygonal panel for Trumpf	**68**
PAT7.1100	Aftermarket polygonal panel for Trumpf	**69**
PAI1 / PAI2 / PAI3 / PAI4	Aftermarket for Herding / Keller	**70**
PAI3S / PAI3L	Aftermarket for Herding / Keller	**71**
PAD3 / PAD4 / PAD5	Aftermarket for Donaldson / Herding / Keller	**72**

THE COMPANY

Shared expertise.
A world of filtration.

CEAN designs and manufactures filter elements to protect people, industrial processes and equipment. From dust collection and air treatment to liquid and gas filtration, we develop solutions for a range of needs, always choosing the filter to suit the application and its operating conditions.

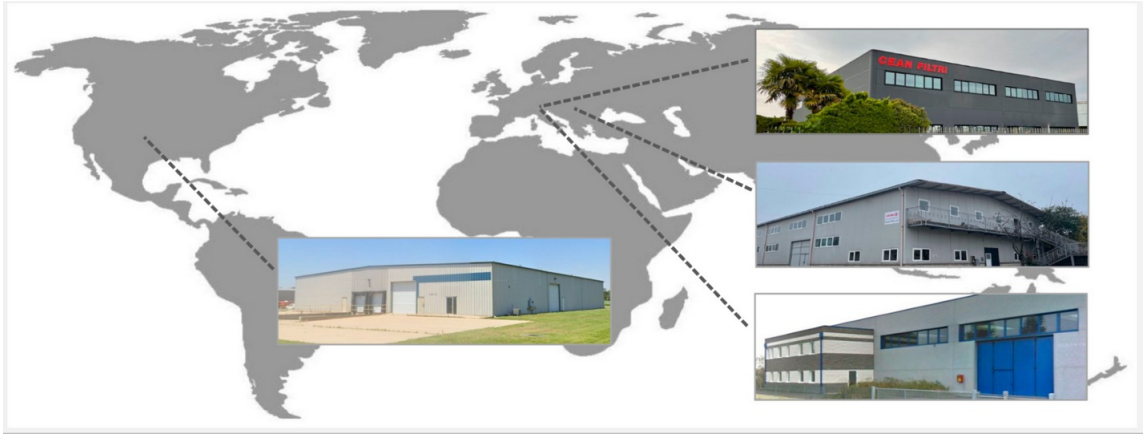

Italy · Romania · United States

Over 45
years in business

Over 3,000
products manufactured

3
companies worldwide

We export our filter elements worldwide. Our investment in advanced manufacturing equipment, flexible production and in-house laboratory testing allows us to help manufacturers and users select media, geometries and mounting systems, and develop solutions tailored to each customer.

Air filtration

Cartridges, panels and filter elements for capturing dust and fumes in industrial plants. Geometries, materials and mounting systems are selected according to the application and operating conditions.

APPLICATIONS UP TO 80 °C

Plastic or polyurethane flanges with steel or plastic support mesh. Cellulose or polyester media with optional nanofibre, PTFE membrane, antistatic, water-repellent or flame-retardant treatment.



HIGH-TEMPERATURE APPLICATIONS

Metal flanges in galvanised steel, stainless steel or aluminium. Metal support mesh and high-temperature filter media including aramid and PPS. Gaskets and components are selected for the operating conditions.



The operating temperature of the complete filter depends on the filter medium, the temperature resistance of the flanges, gaskets and other components, and the process conditions.

Filter media

Cellulose and polyester

CELLULOSE AND 80/20 BLENDS

Abrasive blasting, painting and dry dust.

CY	Cellulose Weight: 140 ±10% g/m²	Air permeability: 450 ±15% l/m²/s	**60 °C max**
CP	Cellulose Weight: 205 ±10% g/m² ISO 16890: ePM10 60–75% | EN 779: M5 | IEC 60335-2-69: M	Air permeability: 205 ±15% l/m²/s	**60 °C max**
CS	Corrugated 80% cellulose + 20% synthetic fibres Weight: 115 ±10% g/m² ISO 16890: ePM10 60–75% | EN 779: M5 | IEC 60335-2-69: M	Air permeability: 150 ±15% l/m²/s	**80 °C max**
CFR	80% cellulose + 20% synthetic fibres, flame retardant Weight: 115 ±10% g/m² ISO 16890: ePM10 60–75% | EN 779: M5 | IEC 60335-2-69: M	Air permeability: 150 ±15% l/m²/s	**80 °C max**

SPUNBOND POLYESTER

Cement plants, welding fumes, shot blasting, mineral dust and general dust collection.
PW applications: fertilisers, gypsum, talc, moist, oily and greasy dust.

PI	Spunbond polyester Weight: 200 ±10% g/m² ISO 16890: ePM10 60–75% | EN 779: M5 | IEC 60335-2-69: M	Air permeability: 230 ±15% l/m²/s	**120 °C max**
PL	Spunbond polyester Weight: 260 ±10% g/m² ISO 16890: ePM10 60–75% | EN 779: M5 | IEC 60335-2-69: M	Air permeability: 115 ±15% l/m²/s	**120 °C max**
PM	Spunbond polyester Weight: 130 ±10% g/m² ISO 16890: ePM10 60–75% | EN 779: M5	Air permeability: 450 ±15% l/m²/s	**120 °C max**
PW	Water-repellent polyester Weight: 230 ±10% g/m² ISO 16890: ePM10 60–75% | EN 779: M5 | IEC 60335-2-69: M	Air permeability: 180 ±15% l/m²/s	**140 °C max**

Air permeability measured at 200 Pa.

Filter media

Specialty media and membranes

POLYPROPYLENE

Fertilisers, gypsum, talc, moist, oily and greasy dust.

PP	Polypropylene Weight: 150 ±10% g/m²	Air permeability: 155 ±15% l/m²/s	**80 °C max**
	ISO 16890: ePM10 60–75% | EN 779: M5 | IEC 60335-2-69: M | FDA		
PPB	Polypropylene Weight: 120 ±10% g/m²	Air permeability: 500 ±15% l/m²/s	**80 °C max**
	ISO 16890: ePM1 55% | EN 779: F7 | IEC 60335-2-69: L | FDA		

NANOFIBRE AND MEMBRANES

Thermal spraying, laser and plasma cutting, food, rubber, fibreglass and pharmaceutical industries, oily and sticky dust.

WEB	Corrugated 80/20 cellulose/synthetic blend with nanofibre, flame retardant Weight: 115 ±10% g/m²	Air permeability: 115 ±15% l/m²/s	**80 °C max**
	ISO 16890: ePM1 80–95% | EN 779: F9 | IEC 60335-2-69: M		
PTF	Corrugated spunbond polyester with ePTFE membrane Weight: 240 ±10% g/m²	Air permeability: 105 ±15% l/m²/s	**120 °C max**
	EN 1822: E11-E12 | IEC 60335-2-69: M | ISO 29463-3: ISO 15E		
PTG	Polyester with PTFE membrane Weight: 260 ±10% g/m²	Air permeability: 45 ±15% l/m²/s	**140 °C max**
	EN 1822: H13-H14 | IEC 60335-2-69: M | FDA		
PWA	Spunbond polyester with nanofibre Weight: 130 ±10% g/m²	Air permeability: 190 ±15% l/m²/s	**120 °C max**
	ISO 16890: ePM1 80–95% | EN 779: F9 | IEC 60335-2-69: M		
PWB	Spunbond polyester with nanofibre Weight: 240 ±10% g/m²	Air permeability: 175 ±15% l/m²/s	**120 °C max**
	ISO 16890: ePM1 80–95% | EN 779: F9 | IEC 60335-2-69: M		

Air permeability measured at 200 Pa.

The stated properties apply to the filter medium.

Filter media

Antistatic and high-temperature media

ANTISTATIC MEDIA

Powder coating, aluminium, grain, plastics, leather and electrostatically charged dust.

ALU	Antistatic water-repellent polyester Weight: 230 ±10% g/m²	Air permeability: 140 ±15% l/m²/s	**140 °C max**
	ISO 16890: ePM1 85% | IEC 60335-2-69: M | ATEX		
ANT	Antistatic polyester Weight: 260 ±10% g/m²	Air permeability: 140 ±15% l/m²/s	**140 °C max**
	ISO 16890: ePM1 85% | IEC 60335-2-69: M | ATEX · FDA		
APTF	Antistatic polyester with PTFE membrane Weight: 265 ±10% g/m²	Air permeability: 45 ±15% l/m²/s	**140 °C max**
	EN 1822: H13 | IEC 60335-2-69: M | ATEX · FDA		
AWB	Antistatic polyester with nanofibre Weight: 230 ±10% g/m²	Air permeability: 160 ±15% l/m²/s	**140 °C max**
	EN 1822: E11 | IEC 60335-2-69: M | ATEX · FDA		

FLAME-RETARDANT MEDIA

PFR	Flame-retardant polyester Weight: 260 ±10% g/m²	Air permeability: 180 ±15% l/m²/s	**140 °C max**
	IEC 60335-2-69: M		
AFR	Flame-retardant antistatic polyester Weight: 260 ±10% g/m²	Air permeability: 140 ±15% l/m²/s	**140 °C max**
	IEC 60335-2-69: M | ATEX		

HIGH-TEMPERATURE MEDIA

Foundries, incinerators and processes involving hot dust.
Observe the maximum temperature for each medium.

NX	Meta-aramid Weight: 400 ±10% g/m²	Air permeability: 330 ±15% l/m²/s	**200 °C max**
	IEC 60335-2-69: M		
PPS	Polyphenylene sulphide (PPS) Weight: 380 ±10% g/m²	Air permeability: 250 ±15% l/m²/s	**190 °C max**
	IEC 60335-2-69: M		
NXT	Meta-aramid with PTFE membrane Weight: 400 ±10% g/m²	Air permeability: 100 ±15% l/m²/s	**200 °C max**
	EN 1822: E10 | IEC 60335-2-69: M		
PPST	PPS with PTFE membrane Weight: 380 ±10% g/m²	Air permeability: 90 ±15% l/m²/s	**190 °C max**
	EN 1822: E10 | IEC 60335-2-69: M		

Coding
of filter elements

The code identifies the model, height, filter area, medium and Venturi.

CODE EXAMPLE

C2.	600.	10.	ANT.	VE
MODEL	HEIGHT	FILTER AREA	MEDIUM	VENTURI

HOW TO READ THE CODE

N.	FIELD	VALUE / MEANING
01	**Model**	**C2** Examples: C1, C2, C4, C5…
02	**Filter element height**	**600 mm** Other heights: 500, 1000, 1200, 1500 mm…
03	**Filter area**	**10 m²** Examples: 5, 10, 15, 20 m²…
04	**Filter medium**	**ANT = antistatic polyester** See codes in the filter media tables.
05	**Venturi**	**VE = external Venturi** VI = internal Venturi

C2.600.10.ANT.VE

C2 model, 600 mm high, 10 m² filter area, ANT medium, external Venturi.

B122 / B128 / B133 / B135 / B140...

Top mounting with polyurethane flange

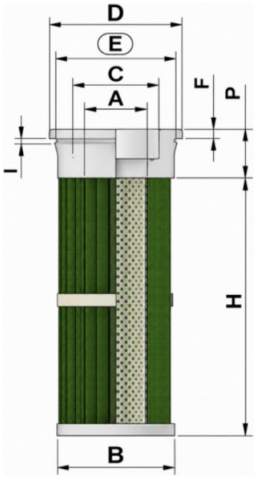



Code	ØA	ØB	ØC	ØD	ØE	I	F	P	H min.	H max.
B122	60	118	102	150	120	4,5	11	55	250	2000
B128	60	120	105	155	128	4,5	11	35	250	2000
B133	70	125	108	155	133	4,5	11	55	250	2000
B135	70	127	110	155	135	4,5	11	55	250	2000
B140	70	133	112	160	140	4,5	11	55	250	2000
B153	80	142	120	180	153	4,5	11	55	250	2000
B155	80	142	120	180	155	4,5	11	55	250	2000
B158	80	150	130	182	158	4,5	11	55	250	2000
B160	80	153	140	187	160	4,5	11	55	250	2000
B165	86	158	122	190	165	4,5	11	55	250	2000
B190	115	180	155	218	190	4,5	11	55	250	2000
B215	120	200	175	244	215	4,5	11	55	250	2000

Flange	Soft polyurethane
End cap	Plastic
Inner mesh	Polypropylene/steel
Temperature	75°C. max.

AVAILABLE FILTER MEDIA

Polyester, water-repellent polyester	PI · PL · PM · PW
Polyester with nanofibre	PWA · PWB
Polypropylene	PP
Polyester with PTFE membrane	PTF · PTG
Antistatic, antistatic PTFE membrane and nanofibre	ALU · ANT · APTF · AWB
Flame retardant	PFR · AFR

B154

Top mounting with polyurethane flange

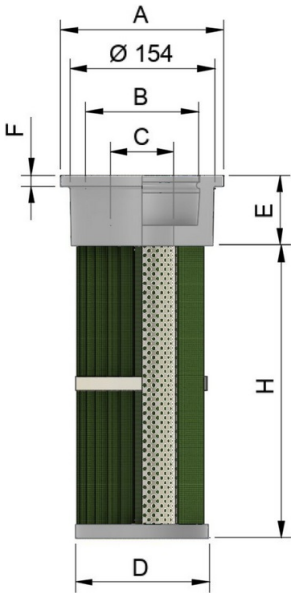





Code	ØA	ØB	ØC	ØD	E	F	H min.	H max.
B154	174	123	80	150	55	12	250	2000

Flange	Soft polyurethane
End cap	Plastic
Inner mesh	Polypropylene/steel
Temperature	75°C. max.

AVAILABLE FILTER MEDIA

Polyester, water-repellent polyester	PI · PL · PM · PW
Polyester with nanofibre	PWA · PWB
Polypropylene	PP
Polyester with PTFE membrane	PTF · PTG
Antistatic, antistatic PTFE membrane and nanofibre	ALU · ANT · APTF · AWB
Flame retardant	PFR · AFR

Filter temperature depends on flanges, gaskets and medium. Media codes and specifications: pages 9–11.

C1 / C2 / C4 / C5 / C6...

Three-hook plastic flange

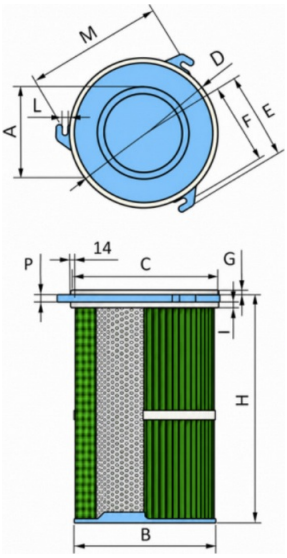





Code	ØA	ØB	ØC	ØD	E	F	G	I	L	P	M	H min.	H max.
C1	215	325	345	380	212	196	12	14	12	15	339	300	1600
C2	215	325	308	345	197	182	12	0	10	15	315	300	1600
C2S *	215	325	308	345	197	182	12	0	10	15	315	300	1600
C4	135	215	235	245	147	132	10	10	10	15	229	300	1800
C5	85	150	170	188	114	102	6	6	10	13	177	250	2000
C6	82	142	160	165	105	90	6	6	10	13	156	250	2000
C7	75	130	150	155	95	85	6	6	8	13	147	250	2000
C8	60	120	135	140	85	72	0	6	8	13	125	250	2000
C9	82	142	155	175	112	97	6	6	10	13	168	250	2000

Flange and end cap	Plastic
Inner mesh	Polypropylene/steel
Gasket	Elastomer/silicone
Temperature	80°C. max.

References: C1.1200.16.PL = Donaldson 2625576 - C4.1500.10.ANT = Donaldson 2626563 - C6.1200.04.PL = Donaldson 2625816 - C1.1200.16.PWB = LP 324 G-12-A 15-07 - C1.1500.20.PWB = Freudenebrg LP 324 G-15-A 19-07 - C6.1200.05.PWB = Freudenberg LP 145 G-12-A 43-20 - C4.1000.05.PWB = LP 218 G- 10-A 50-07

AVAILABLE FILTER MEDIA

Cellulose, 80/20 blend, 80/20 with nanofibre	CY · CP · CS · WEB
Polyester, water-repellent polyester	PI · PL · PM · PW
Polyester with nanofibre	PWA · PWB
Polypropylene	PP · PPB
PTFE membrane	PTF · PTG
Antistatic, antistatic PTFE membrane and nanofibre	ALU · ANT · APTF · AWB
Flame retardant	PFR · AFR

* C2S: C2 variant with a lower gasket only.

C1F / C2F / C4F / C5F / C6F

Three-hook aluminium flange

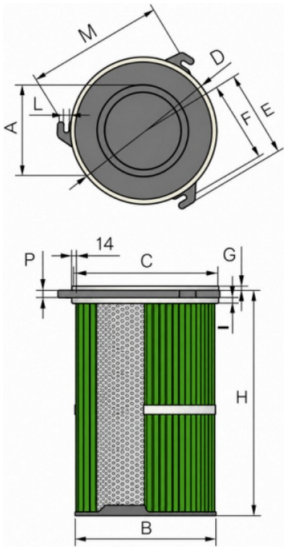





Code	ØA	ØB	ØC	ØD	E	F	G	I	L	P	M	H min	H max.
C1F	215	325	345	380	212	196	12	14	12	15	339	300	1600
C2F	215	325	308	345	197	182	12	0	10	15	315	300	1600
C4F	135	215	235	245	147	132	10	10	10	15	229	300	1800
C5F	85	150	170	188	114	102	6	6	10	13	177	250	2000
C6F	82	142	165	165	105	90	6	6	10	13	156	250	2000

Flange and end cap	Aluminium
Inner mesh	Galvanised steel
Gasket	Elastomer/silicone
Temperature	Depends on the medium and compatible sealants and gaskets

References: C1F.600.10.PL = Donaldson 2625576 - C1F.1200.20.PL = Donaldson 2625786

AVAILABLE FILTER MEDIA

Cellulose, 80/20 blend, 80/20 with nanofibre	CY · CP · CS · WEB
Polyester, water-repellent polyester	PI · PL · PM · PW
Polyester with nanofibre	PWA · PWB
Polypropylene	PP · PPB
PTFE membrane	PTF · PTG
Antistatic, antistatic PTFE membrane and nanofibre	ALU · ANT · APTF · AWB
Flame retardant	PFR · AFR
High temperature	NX · PPS · NXT · PPST

For high-temperature media, silicone- or epoxy-based sealants and gaskets are used.

Filter temperature depends on flanges, gaskets and medium. Media codes and specifications: pages 9–11.

C1C / C2C / C4C / C1CF / C2CF / C4CF

Conical cartridge with three-hook flange

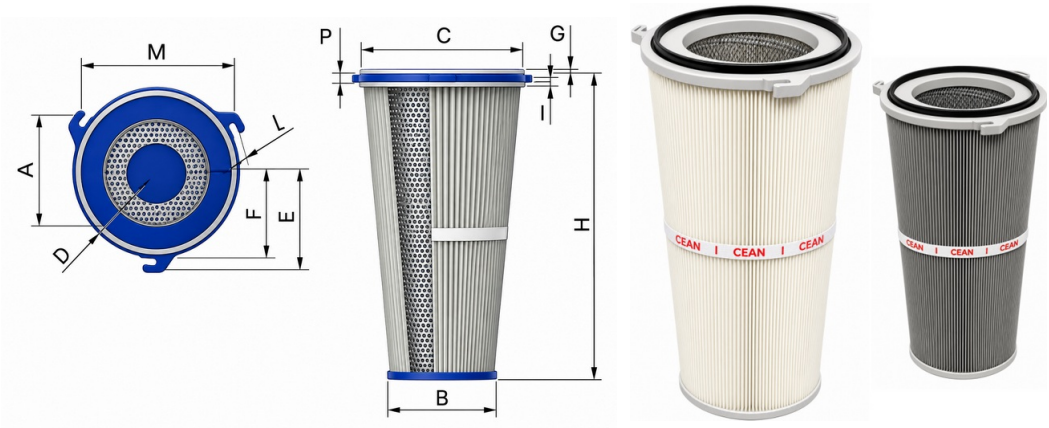

PLASTIC FLANGES · 80°C MAX.

Code	ØA	ØB	ØC	ØD	E	F	G	I	L	P	M	H min.	H max.
C1C	215	210	345	380	212	196	12	14	12	15	339	600	1600
C2C	215	210	308	345	197	182	12	0	10	15	315	600	1600
C4C	135	145	235	245	147	132	10	10	10	15	229	600	1800

METAL FLANGES · UP TO 120°C*

Code	ØA	ØB	ØC	ØD	E	F	G	I	L	P	M	H min.	H max.
C1CF	215	210	345	380	212	196	12	14	12	15	339	600	1600
C2CF	215	210	308	345	197	182	12	0	10	15	315	600	1600
C4CF	135	145	235	245	147	132	10	10	10	15	229	600	1800

Inner mesh	Galvanised steel
Gasket	Elastomer/silicone
Temperature	Depends on the medium and compatible sealants and gaskets

AVAILABLE FILTER MEDIA

Polyester, water-repellent polyester	PM · PW
Polyester with nanofibre	PWB
PTFE membrane	PTF · PTG
Antistatic, antistatic PTFE membrane and nanofibre	ALU · ANT · APTF · AWB
Flame retardant	PFR · AFR

Filter temperature depends on flanges, gaskets and medium. Media codes and specifications: pages 9–11.

C1X / C2X

Inner cartridge for extra filter area, with a three-hook flange

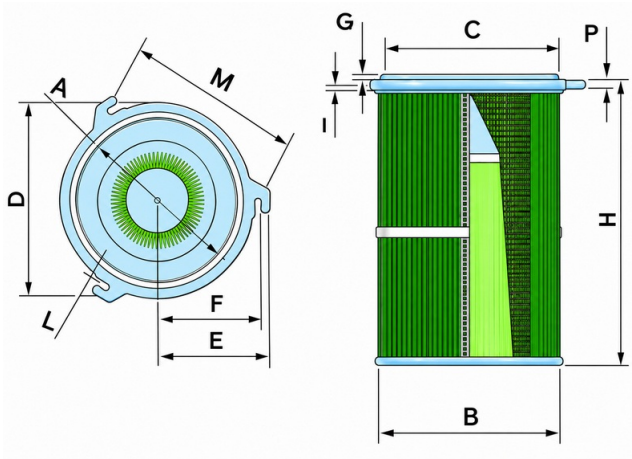



Code	ØA	ØB	ØC	ØD	E	F	G	I	L	P	M	H min.	H max.
C1X	215	325	345	380	212	196	12	14	12	15	339	600	1600
C2X	215	325	308	345	197	182	12	0	10	15	315	600	1600

Flange and end cap	Plastic
Inner mesh	Galvanised steel
Gasket	Elastomer/silicone
Temperature	80°C. max.

AVAILABLE FILTER MEDIA

Polyester, water-repellent polyester	PI · PL · PM · PW
Polyester with nanofibre	PWA · PWB
PTFE membrane	PTF · PTG
Antistatic, antistatic PTFE membrane and nanofibre	ALU · ANT · APTF · AWB
Flame retardant	PFR · AFR

Filter temperature depends on flanges, gaskets and medium. Media codes and specifications: pages 9–11.

CS

Freudenberg-style quick-release flange

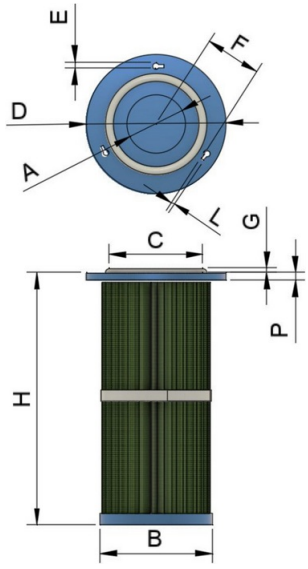



Code	ØA	ØB	ØC	ØD	ØE	F	L	P	G	H min.	H max.
CS	85	143	150	210	16	90	11,5	12	6	600	1500

Flange and end cap	Plastic
Mesh	Galvanised steel
Gasket	Elastomer/silicone
Temperature	80°C. max.

AVAILABLE FILTER MEDIA

Polyester, water-repellent polyester	PI · PL · PM · PW
Polyester with nanofibre	PWA · PWB
PTFE membrane	PTF · PTG
Antistatic, antistatic PTFE membrane and nanofibre	ALU · ANT · APTF · AWB
Flame retardant	PFR · AFR

Filter temperature depends on flanges, gaskets and medium. Media codes and specifications: pages 9–11.

D1 / D2 / D3 / D4 / D5

Mounting via elastomer flange on the inner diameter

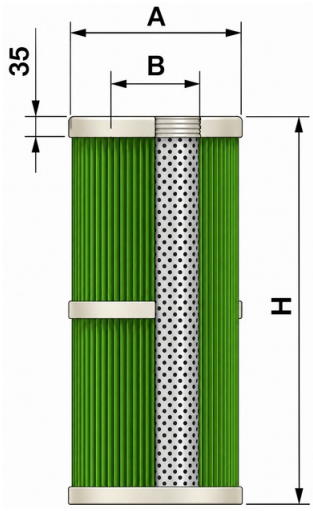



Code	ØA	ØB	H min.	H max.
D1	135	80	200	1500
D2	128	86	200	1500
D3	150	101	200	1500
D4	228	143	200	1500
D5	324	212	200	1500

Flange	Soft polyurethane
End cap	Soft polyurethane
Inner mesh	Plastic/metal
Temperature	65°C. max.

AVAILABLE FILTER MEDIA

Polyester, water-repellent polyester	PI · PL · PM · PW
Polyester with nanofibre	PWA · PWB
PTFE membrane	PTF · PTG
Antistatic, antistatic PTFE membrane and nanofibre	ALU · ANT · APTF · AWB

Filter temperature depends on flanges, gaskets and medium. Media codes and specifications: pages 9–11.

DW.500 / DW.750 / DW.900

Aftermarket replacement for WAM KFEC / WAMECO

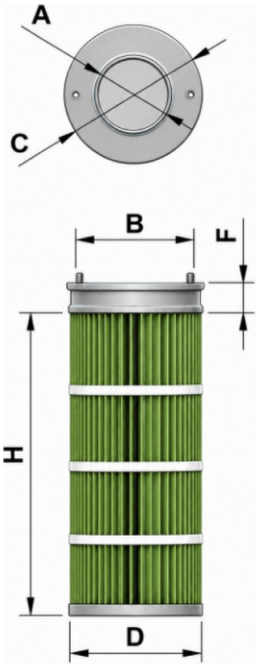





Code	ØA	ØB	ØC	ØD	E	H	Area
DW.500	80	122	154	140	35	500	1.0 m²
DW.750	80	122	154	140	35	750	1.5 m²
DW.900	80	122	154	140	35	900	1.8 m²

Flange	Soft polyurethane
End cap	Plastic, with star-shaped open end cap on PTFE membrane versions
Inner mesh	Plastic/steel
Temperature	65°C. max.

AVAILABLE FILTER MEDIA

Polyester, water-repellent polyester	PL · PM · PW
Polyester with nanofibre	PWB
PTFE membrane	PTF · PTG
Antistatic, antistatic PTFE membrane and nanofibre	ALU · ANT · APTF · AWB

Filter temperature depends on flanges, gaskets and medium. Media codes and specifications: pages 9–11.

DN.750 / DN.950

Aftermarket replacement for Dantherm

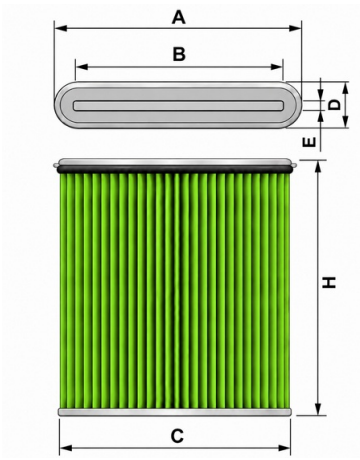



Code	A	B	C	D	E	H	Area
DN.750	780	626	695	138	28	745	9.5 m²
DN.950	780	626	695	138	28	945	12 m²
DA.750	720	626	650	165	50	750	8 m²

PTFE-95-10-6 DN.950.12.APTF = Nederman PW-PTFE-95-12-6 (12375387) / PW NS 95-12-6 / PWA 95-12-6 / PW PTFE-95-12-4 / PW NS-95-12-4 DN.750.10.APTF = Nederman PWA NS-75-10-6 / PW PTFE-75-10-6 / PW NS-75-10-6

Flange and end cap	Galvanised steel
Inner mesh	Galvanised steel
Gasket	Elastomer
Temperature	80°C. max.

AVAILABLE FILTER MEDIA

Water-repellent polyester	PW
Polyester with nanofibre	PWB
PTFE membrane	PTF · PTG
Antistatic, antistatic PTFE membrane and nanofibre	ALU · APTF · AWB

Filter temperature depends on flanges, gaskets and medium. Media codes and specifications: pages 9–11.

F1 / F2 / FX2 / F3 / F4

Four-hook plastic flange

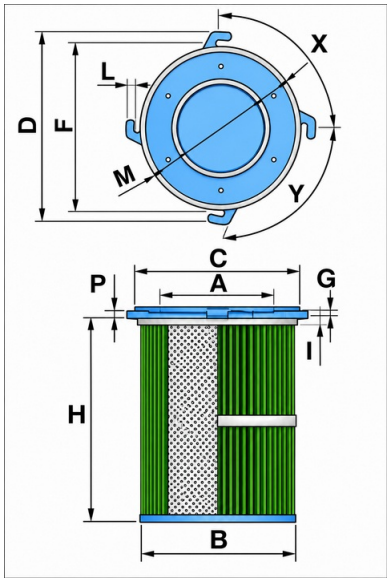



Code	ØA	ØB	ØC	ØD	ØF	G	I	L	P	X	Y	H min	H max.
F1	215	324	270	428	392	10	10	12	15	90°	90°	300	1600
F2	215	324	270	403	368	10	0	12	15	90°	90°	300	1600
FX2	215	324	270	400	365	0	10	12	15	83°	97°	300	1600
F3	140	220	230	300	265	8	8	10	13	90°	90°	300	1800
F4	90	115	130	210	175	6	6	10	13	90°	90°	250	2000

Flange and end cap	Plastic
Inner mesh	Galvanised steel
Gasket	Elastomer/silicone
Temperature	80°C. max.

AVAILABLE FILTER MEDIA

Polyester, water-repellent polyester	PI · PL · PM · PW
Polyester with nanofibre	PWA · PWB
PTFE membrane	PTF · PTG
Antistatic, antistatic PTFE membrane and nanofibre	ALU · ANT · APTF · AWB
Flame retardant	PFR · AFR

Filter temperature depends on flanges, gaskets and medium. Media codes and specifications: pages 9–11.

F1F / F2F / F3F

Four-hook aluminium flange

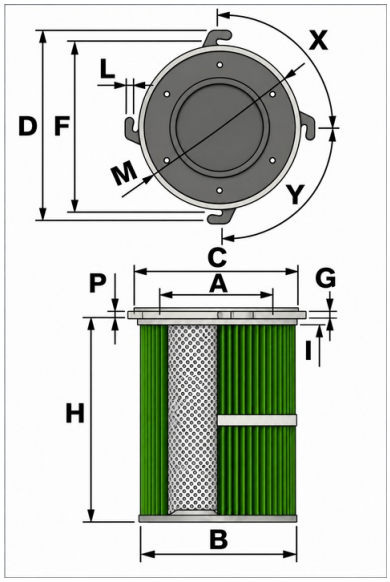



Code	ØA	ØB	ØC	ØD	ØF	G	I	L	P	X	Y	H min	H max.
F1F	215	324	270	428	392	10	10	12	15	90°	90°	300	1600
F2F	215	324	270	403	368	10	0	12	15	90°	90°	300	1600
F3F	140	220	230	300	265	8	8	10	13	90°	90°	300	1800

Flange and end cap	Aluminium
Inner mesh	Galvanised steel
Gasket	Elastomer/silicone
Temperature	Depends on the medium and compatible sealants and gaskets

AVAILABLE FILTER MEDIA

Cellulose, 80/20 blend, 80/20 with nanofibre	CY · CP · CS · WEB
Polyester, water-repellent polyester	PI · PL · PM · PW
Polyester with nanofibre	PWA · PWB
Polypropylene	PP · PPB
PTFE membrane	PTF · PTG
Antistatic, antistatic PTFE membrane and nanofibre	ALU · ANT · APTF · AWB
Flame retardant	PFR · AFR
High temperature	NX · PPS · NXT · PPST

For high-temperature media, silicone- or epoxy-based sealants and gaskets are used.

Filter temperature depends on flanges, gaskets and medium. Media codes and specifications: pages 9–11.

E1 / E2 / E3 / E4 / E5...

Top-mounted plastic flange

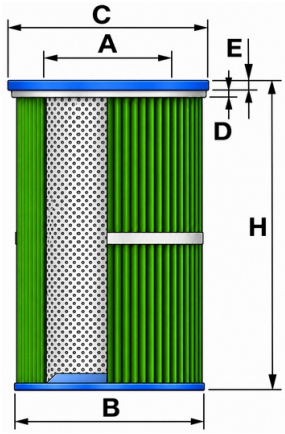



Code	ØA	ØB	ØC	D	E	H min.	H max.
E1	70	125	155	7	10	250	2000
E2	95	145	175	7	10	250	2000
E3	100	160	185	7	10	250	2000
E4	85	150	195	7	10	250	2000
E5	105	200	235	10	10	250	2000
E6	145	225	260	10	10	250	2000
E7	200	300	335	10	10	250	2000
E8	215	325	355	10	10	250	2000
E9	85	145	185	7	10	250	2000
E10	85	156	185	7	10	250	2000
E11	85	145	195	7	10	250	2000

Flange and end cap	Plastic
Inner mesh	Plastic/steel
Gasket	Elastomer/silicone
Temperature	80°C. max.

References: E5 = Donaldson Siloair 1A51399

AVAILABLE FILTER MEDIA

Polyester, water-repellent polyester	PI · PL · PM · PW
Polyester with nanofibre	PWA · PWB
PTFE membrane	PTF · PTG
Antistatic, antistatic PTFE membrane and nanofibre	ALU · ANT · APTF · AWB
Flame retardant	PFR · AFR

Filter temperature depends on flanges, gaskets and medium. Media codes and specifications: pages 9–11.

E4F / E7F / E8F / E9F / E10F...

Top-mounted galvanised steel flange

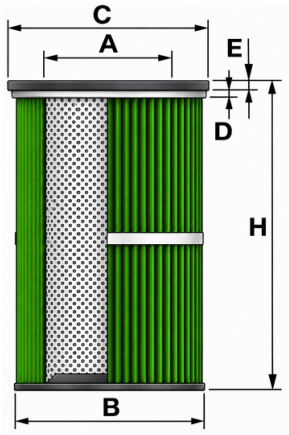



Code	ØA	ØB	ØC	D	E	H min.	H max.
E4F	85	150	195	7	10	250	2000
E7F	200	300	335	10	10	250	2000
E8F	215	325	355	10	10	250	2000
E9F	85	145	185	7	10	250	2000
E10F	85	156	185	7	10	250	2000
E11F	85	145	195	7	10	250	2000

Flange and end cap	Galvanised steel
Inner mesh	Galvanised steel
Gasket	Elastomer/silicone
Temperature	Depends on filter medium, sealants and gaskets

Stainless steel flanges, mesh and end caps are available on request.

References: E8F = Mahle 852 829 - 852 781 - 852 943

AVAILABLE FILTER MEDIA

Polyester, water-repellent polyester	PI · PL · PM · PW
Polyester with nanofibre	PWA · PWB
PTFE membrane	PTF · PTG
Antistatic, antistatic PTFE membrane and nanofibre	ALU · ANT · APTF · AWB
Flame retardant	PFR · AFR

Filter temperature depends on flanges, gaskets and medium. Media codes and specifications: pages 9–11.

EC2 / EC3 / ECX3 / EC4 / EC5...

Conical, top mounting with plastic flange

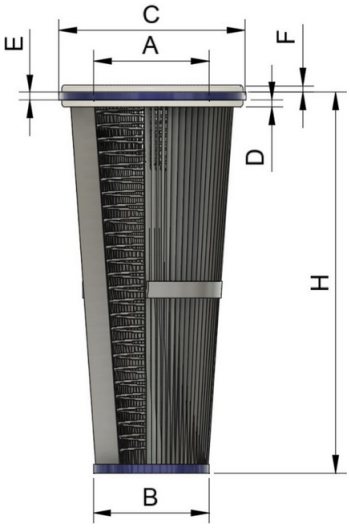



EC lower gasket



ECX upper gasket

Code	ØA	ØB	ØC	D	F	E	H min.	H max.
EC2	260	210	430	8		10	270	1200
EC3	95	110	185	8		10	600	1200
ECX3	95	110	185		8	10	600	1200
EC4	100	110	210	8		10	600	1200
EC5	100	110	195	8		10	600	1200
ECX5	100	110	195		8	10	600	1200

Flange and end cap	Plastic
Inner mesh	Galvanised steel
Gasket	Elastomer/silicone
Temperature	80°C. max.

AVAILABLE FILTER MEDIA

Polyester, water-repellent polyester	PI · PL · PM · PW
Polyester with nanofibre	PWA · PWB
PTFE membrane	PTF · PTG
Antistatic, antistatic PTFE membrane and nanofibre	ALU · ANT · APTF · AWB
Flame retardant	PFR · AFR

Filter temperature depends on flanges, gaskets and medium. Media codes and specifications: pages 9–11.

EC2F / EC3F / EC4F / EC5F

Conical, top mounting with galvanised steel flange

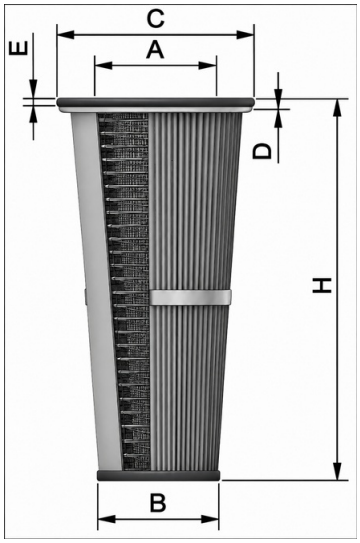



Code	ØA	ØB	ØC	D	E	H min.	H max.
EC2F	260	210	430	8	10	270	1200
EC3F	95	110	185	8	10	600	1200
EC4F	100	110	210	8	10	600	1200
EC5F	100	110	195	8	10	600	1200

Flange and end cap	Galvanised steel
Inner mesh	Galvanised steel
Gasket	Elastomer/silicone
Temperature	Depends on the medium and compatible sealants and gaskets

References: EC3F = Mahle 852 029 - 852 953 - 852 828 - 852 653

AVAILABLE FILTER MEDIA

Polyester, water-repellent polyester	PI · PL · PM · PW
Polyester with nanofibre	PWA · PWB
PTFE membrane	PTF · PTG
Antistatic, antistatic PTFE membrane and nanofibre	ALU · ANT · APTF · AWB
Flame retardant	PFR · AFR

Filter temperature depends on flanges, gaskets and medium. Media codes and specifications: pages 9–11.

L1 / L2 / L3

Dirty-side mounting with polyurethane flange

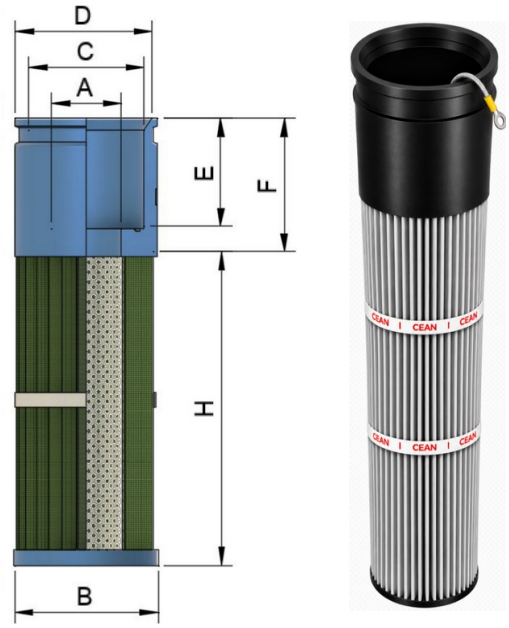

Code	ØA	ØB	ØC	ØD	E	F	H min.	H max.
L1	82	125	102	124	70	80	250	2000
L2	85	145	123	148	70	80	250	2000
L3	82	145	133	151	70	80	250	2000

Flange	Soft polyurethane
End cap	Plastic
Inner mesh	Plastic/steel
Temperature	65°C. max.

AVAILABLE FILTER MEDIA

Polyester, water-repellent polyester	PI · PL · PM · PW
Polyester with nanofibre	PWA · PWB
PTFE membrane	PTF · PTG
Antistatic, antistatic PTFE membrane and nanofibre	ALU · ANT · APTF · AWB
Flame retardant	PFR · AFR

Filter temperature depends on flanges, gaskets and medium. Media codes and specifications: pages 9–11.

M1 / M2 / M3 / M4

Open/closed, steel end cap and plastic flange with gasket

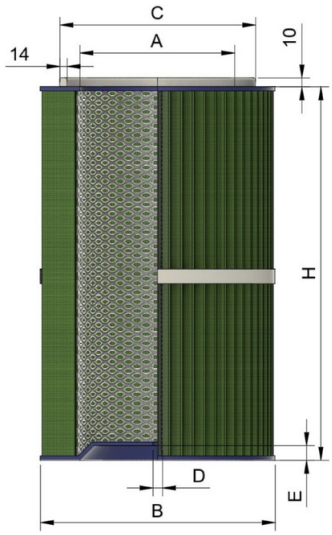



Code	ØA	ØB	ØC	ØD	E	H min.	H max.
M1	96	150	130	10,5	0	100	1500
M2	100	200	180	10,5	0	100	1500
M3	125	220	180	11	15	100	1500
M4	145	230	180	11	20	100	1500

Flange	Plastic
Inner mesh	Galvanised steel
End cap	Galvanised steel
Gasket	Triangular elastomer gasket
Temperature	80°C. max.

AVAILABLE FILTER MEDIA

Cellulose, 80/20 blend, 80/20 with nanofibre	CY · CP · CS · WEB
Polyester, water-repellent polyester	PI · PL · PM · PW
Polyester with nanofibre	PWA · PWB
Polypropylene	PP · PPB
PTFE membrane	PTF · PTG
Antistatic, antistatic PTFE membrane and nanofibre	ALU · ANT · APTF · AWB

Filter temperature depends on flanges, gaskets and medium. Media codes and specifications: pages 9–11.

MR1 / MR2 / MR3 / MR4

Open/closed, inner and outer mesh, steel end cap and plastic flange

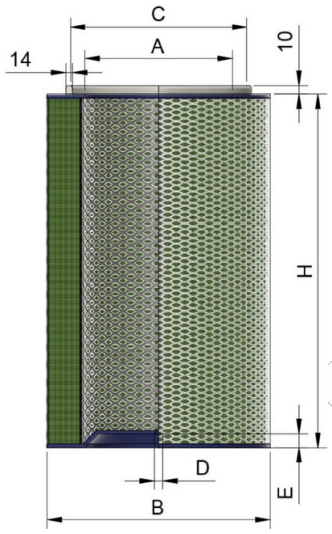





Code	ØA	ØB	ØC	ØD	E	H min.	H max.
MR1	96	150	130	10,5	0	100	1500
MR2	100	200	180	10,5	0	100	1500
MR3	125	220	180	11	15	100	1500
MR4	145	230	180	11	20	100	1500

Flange	Plastic
End cap	Galvanised steel
Inner and outer mesh	Galvanised steel
Gasket	Triangular elastomer gasket
Temperature	80°C. max.

AVAILABLE FILTER MEDIA

Cellulose, 80/20 blend, 80/20 with nanofibre	CY · CP · CS · WEB
Polyester, water-repellent polyester	PI · PL · PM · PW
Polyester with nanofibre	PWA · PWB
Polypropylene	PP · PPB
PTFE membrane	PTF · PTG
Antistatic, antistatic PTFE membrane and nanofibre	ALU · ANT · APTF · AWB

Filter temperature depends on flanges, gaskets and medium. Media codes and specifications: pages 9–11.

M5F / M6F / M7F / M8F

Open/closed, steel flanges and end cap, with gasket

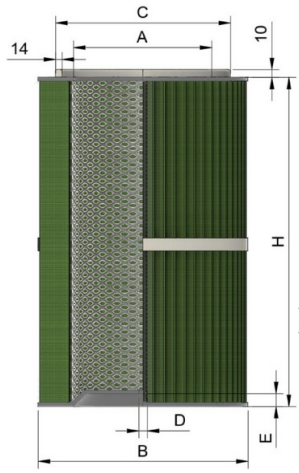





Code	ØA	ØB	ØC	ØD	E	H min.	H max.
M5F	180	270	260	13	25	250	1500
M6F	200	300	245	13	25	250	1500
M7F	215	324	265	13	30	250	1500
M8F	241	351	290	13	30	250	1500

Flange and end cap	Galvanised steel
Inner mesh	Galvanised steel
Gasket	Elastomer/silicone
Temperature	Depends on filter medium, sealants and gaskets

References: M7F.600.10.APW = Freudenberg LP 327 S-60-A 10-09 - M7F.660.10.PWB = Donaldson 2625180 - M7F.660.10.APW = Donaldson 2625181 - M7F.1200.15.APW = Freudenberg LP 327 S-12-A 15-18 - M7F.600.10.PTF = TEKA Art.-Nr. 10025 / 100090 / 10025078 / 100050125 / Nederman Art.-Nr. 12375379 - M7F.1200.20.PTF = KEMPER KemTex 1090303 (1090442), TEKA 100090200 - M7F.1200.25.PWB = EKA 100050250, TEKA 1000501420250, TEKA 6161200225308 - M8.1200.20.PTF = Art.-Nr.: 1090447 / 1090344 Plymovent - M8.600.10.PTF = Art.-Nr.: 1090447 / 1090344

AVAILABLE FILTER MEDIA

Cellulose, 80/20 blend, 80/20 with nanofibre	CY · CP · CS · WEB
Polyester, water-repellent polyester	PI · PL · PM · PW
Polyester with nanofibre	PWA · PWB
Polypropylene	PP · PPB
PTFE membrane	PTF · PTG
Antistatic, antistatic PTFE membrane	ALU · ANT · APTF · AWB
Flame retardant	PFR · AFR
High temperature	NX · PPS · NXT · PPST

For high-temperature media, silicone- or epoxy-based sealants and gaskets are used.

Filter temperature depends on flanges, gaskets and medium. Media codes and specifications: pages 9–11.

MR5F / MR6F / MR7F / MR8F

Open/closed, inner and outer mesh, steel flange and end cap

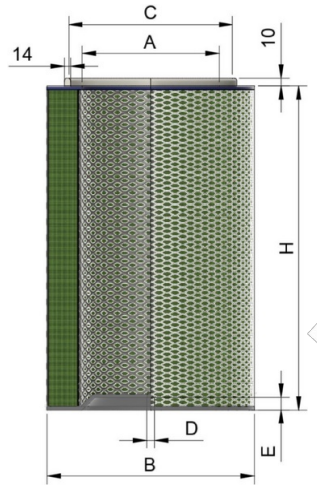





Code	ØA	ØB	ØC	ØD	E	H min.	H max.
MR5F	180	270	260	13	25	250	1500
MR6F	200	300	245	13	25	250	1500
MR7F	215	324	265	13	30	250	1500
MR8F	241	351	290	13	30	250	1500

Flange and end cap	Galvanised steel
Inner and outer mesh	Galvanised steel
Gasket	Elastomer/silicone
Temperature	Depends on the medium and compatible sealants and gaskets

References: MR7F.660.21.WEB = Donaldson 2625002 / 2625023 / 2625107 / P033347/ Sideros 262-6432 - MR7F.660.21.CS = Donaldson 2625005 MR8F.660.23.WEB = Donaldson 2626309

AVAILABLE FILTER MEDIA

Cellulose, 80/20 blend, 80/20 with nanofibre	CY · CP · CS · WEB
Polyester, water-repellent polyester	PI · PL · PM · PW
Polyester with nanofibre	PWA · PWB
Polypropylene	PP · PPB
PTFE membrane	PTF · PTG
Antistatic, antistatic PTFE membrane and nanofibre	ALU · ANT · APTF · AWB
Flame retardant	PFR · AFR
High temperature	NX · PPS · NXT · PPST

For high-temperature media, silicone- or epoxy-based sealants and gaskets are used.

Filter temperature depends on flanges, gaskets and medium. Media codes and specifications: pages 9–11.

MA1 / MA2 / MA3 / MA4

Open/open, inner mesh, steel end cap and plastic flange

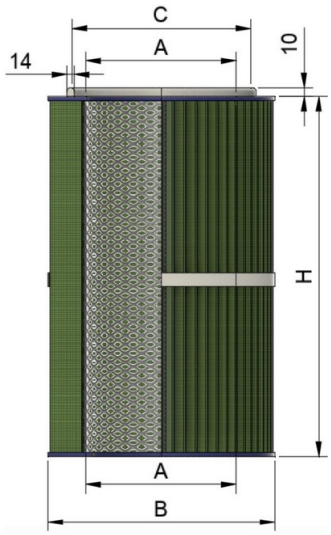

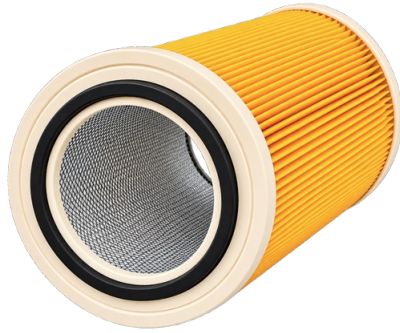

Code	ØA	ØB	ØC	H min.	H max.
MA1	96	150	130	100	1500
MA2	100	200	180	100	1500
MA3	125	220	180	100	1500
MA4	145	230	180	100	1500

Flange	Plastic
Inner mesh	Galvanised steel
Gasket	Triangular elastomer gasket
Temperature	80°C. max.

AVAILABLE FILTER MEDIA

Cellulose, 80/20 blend, 80/20 with nanofibre	CY · CP · CS · WEB
Polyester, water-repellent polyester	PI · PL · PM · PW
Polyester with nanofibre	PWA · PWB
Polypropylene	PP · PPB
PTFE membrane	PTF · PTG
Antistatic, antistatic PTFE membrane and nanofibre	ALU · ANT · APTF · AWB

Filter temperature depends on flanges, gaskets and medium. Media codes and specifications: pages 9–11.

MRA1 / MRA2 / MRA3 / MRA4

Open/open, inner and outer mesh, steel end cap and plastic flange

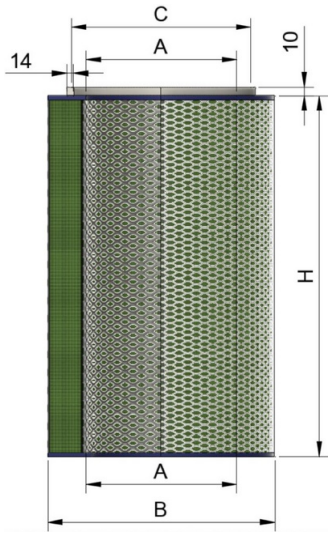

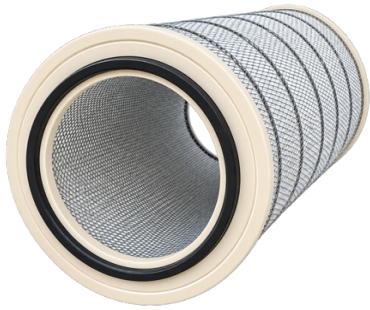

Code	ØA	ØB	ØC	H min.	H max.
MRA1	96	150	130	100	1500
MRA2	100	200	180	100	1500
MRA3	125	220	180	100	1500
MRA4	145	230	180	100	1500

Flange	Plastic
Inner and outer mesh	Galvanised steel
Gasket	Triangular elastomer gasket
Temperature	80°C. max.

AVAILABLE FILTER MEDIA

Cellulose, 80/20 blend, 80/20 with nanofibre	CY · CP · CS · WEB
Polyester, water-repellent polyester	PI · PL · PM · PW
Polyester with nanofibre	PWA · PWB
Polypropylene	PP · PPB
PTFE membrane	PTF · PTG
Antistatic, antistatic PTFE membrane and nanofibre	ALU · ANT · APTF · AWB

Filter temperature depends on flanges, gaskets and medium. Media codes and specifications: pages 9–11.

MA5F / MA6F / MA7F / MA8F

Open/open, inner mesh, galvanised steel flange and end cap

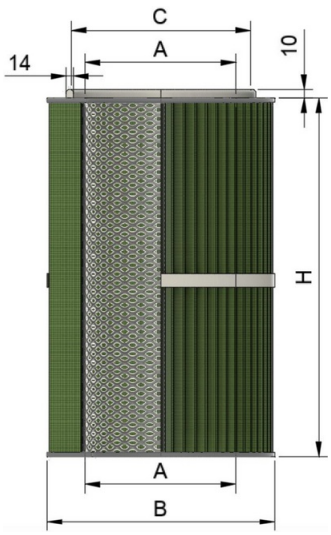



Code	ØA	ØB	ØC	H min.	H max.
MA5F	180	270	260	250	1500
MA6F	200	300	245	250	1500
MA7F	215	324	265	250	1500
MA8F	241	351	290	250	1500

Flange	Galvanised steel
Mesh	Galvanised steel
Gasket	Elastomer/silicone
Temperature	Depends on the medium and compatible sealants and gaskets

References: MA7F.660.10.PWB = Donaldson 2625178 - MA7F.660.10.APWB = Donaldson 2625179 MA8F.660.11.PWB = Donaldson 2625176

AVAILABLE FILTER MEDIA

Cellulose, 80/20 blend, 80/20 with nanofibre	CY · CP · CS · WEB
Polyester, water-repellent polyester	PI · PL · PM · PW
Polyester with nanofibre	PWA · PWB
Polypropylene	PP · PPB
PTFE membrane	PTF · PTG
Antistatic, antistatic PTFE membrane and nanofibre	ALU · ANT · APTF · AWB
Flame retardant	PFR · AFR
High temperature	NX · PPS · NXT · PPST

For high-temperature media, silicone- or epoxy-based sealants and gaskets are used.

Filter temperature depends on flanges, gaskets and medium. Media codes and specifications: pages 9–11.

MRA5F / MRA6F / MRA7F / MRA8F

Open/open, inner and outer mesh, steel flange and end cap

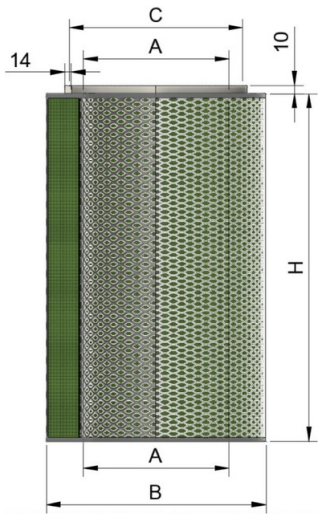



Code	ØA	ØB	ØC	H min.	H max.
MRA5F	180	270	260	250	1500
MRA6F	200	300	245	250	1500
MRA7F	215	324	265	250	1500
MRA8F	241	351	290	250	1500

Flange	Galvanised steel
Inner and outer mesh	Galvanised steel
Gasket	Elastomer/silicone
Temperature	Depends on the medium and compatible sealants and gaskets

References: MRA7F.660.21.WEB = Donaldson 2625001 / 2625015 / 2625106 - MRA7F.660.21.CS = Donaldson 2625006 MRA8F.660.23.WEB = Donaldson 2625025 / 2625026 /2625090 - MRA8F.660.23.CS = Donaldson 2625088 - MRAF.710.25.WEB = Donaldson 2625501

AVAILABLE FILTER MEDIA

Cellulose, 80/20 blend, 80/20 with nanofibre	CY · CP · CS · WEB
Polyester, water-repellent polyester	PI · PL · PM · PW
Polyester with nanofibre	PWA · PWB
Polypropylene	PP · PPB
PTFE membrane	PTF · PTG
Antistatic, antistatic PTFE membrane and nanofibre	ALU · ANT · APTF · AWB
Flame retardant	PFR · AFR
High temperature	NX · PPS · NXT · PPST

For high-temperature media, silicone- or epoxy-based sealants and gaskets are used.

Filter temperature depends on flanges, gaskets and medium. Media codes and specifications: pages 9–11.

MZ / MAZ

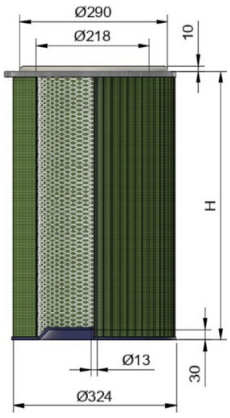

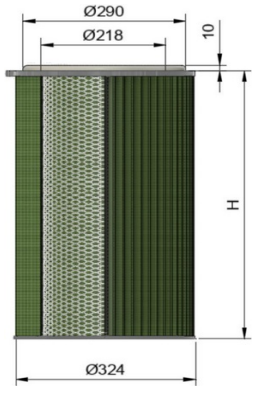

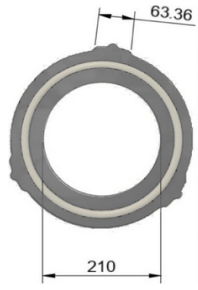



Code	H min.	H max.	Open/closed open/closed
MZ	600	1200	

References: Mahle 852 826 - 852 782 - 852 020 - 852 876 - 852 081

Code	H min.	H max.	Open/open open/open
MAZ	600	1200	

References: Mahle 852 907 - 852 908 - 852 025 - 852 909

Flange	Galvanised steel
Mesh	Galvanised steel
Gasket	Elastomer
Temperature	Depends on the medium and compatible sealants and gaskets

AVAILABLE FILTER MEDIA

Cellulose, 80/20 blend, 80/20 with nanofibre	CY · CP · CS · WEB
Polyester, water-repellent polyester	PI · PL · PM · PW
Polyester with nanofibre	PWA · PWB
Polypropylene	PP · PPB
PTFE membrane	PTF · PTG
Antistatic, antistatic PTFE membrane and nanofibre	ALU · ANT · APTF · AWB
Flame retardant	PFR · AFR
High temperature	NX · PPS · NXT · PPST

For high-temperature media, silicone- or epoxy-based sealants and gaskets are used.

Filter temperature depends on flanges, gaskets and medium. Media codes and specifications: pages 9–11.

NG1 / NG2 / NG3

Ecotex-style quick-release flange

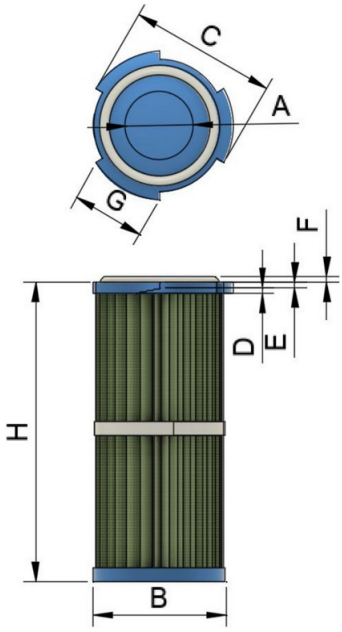



Code	ØA	ØB	ØC	D	E	F	G	H min.	H max.
NG1	80	140	153	15	10	7	80	600	1200
NG2	150	210	215	15	10	7	100	600	1200
NG3	210	320	330	15	10	7	120	600	1200

Flange and end cap	Plastic
Inner mesh	Galvanised steel
Gasket	Elastomer/silicone
Temperature	80°C. max.

AVAILABLE FILTER MEDIA

Polyester, water-repellent polyester	PI · PL · PM · PW
Polyester with nanofibre	PWA · PWB
PTFE membrane	PTF · PTG
Antistatic, antistatic PTFE membrane and nanofibre	ALU · ANT · APTF · AWB
Flame retardant	PFR · AFR

Filter temperature depends on flanges, gaskets and medium. Media codes and specifications: pages 9–11.

NH

Quick-release mounting flange

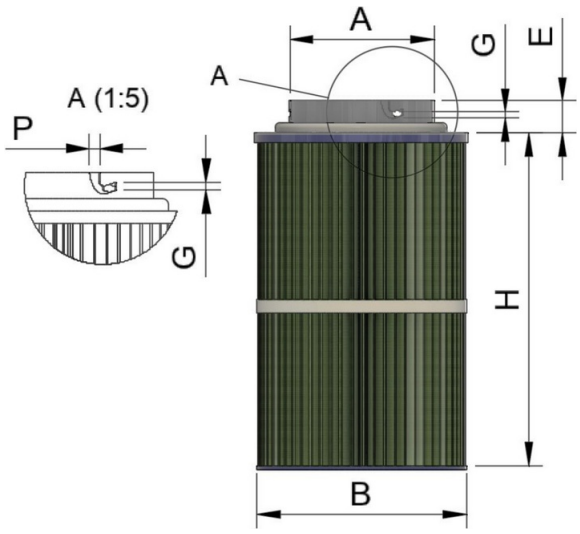



Code	ØA	ØB	E	G	P	H min.	H max.
NH	156	210	48	8	8	500	1600

Flange and end cap	Galvanised steel
Mesh	Galvanised steel
Gasket	Elastomer/silicone
Temperature	Depends on the medium and compatible sealants and gaskets

AVAILABLE FILTER MEDIA

Polyester, water-repellent polyester	PI · PL · PM · PW
Polyester with nanofibre	PWA · PWB
PTFE membrane	PTF · PTG
Antistatic, antistatic PTFE membrane and nanofibre	ALU · ANT · APTF · AWB
Flame retardant	PFR · AFR

Filter temperature depends on flanges, gaskets and medium. Media codes and specifications: pages 9–11.

NP1 / NP2

Quick-release mounting flange

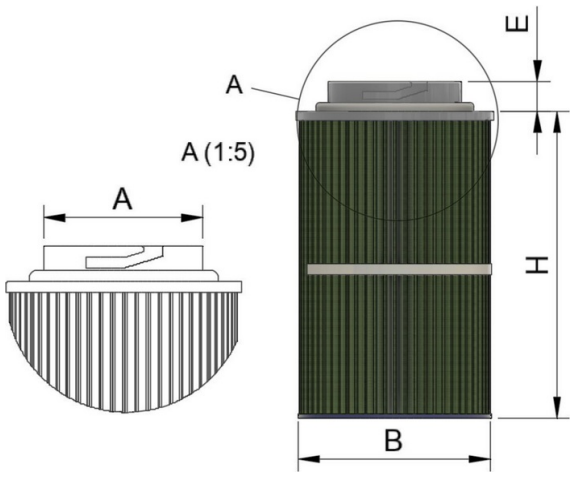



Code	ØA	ØB	E	H min.	H max.
NP1	215	325	51	500	1600
NP2	96	156	45	500	1600

Flange and end cap	Galvanised steel
Inner mesh	Galvanised steel
Gasket	Elastomer/silicone
Temperature	Depends on the medium and compatible sealants and gaskets

References: NP1 = Mahle 852 - 030

AVAILABLE FILTER MEDIA

Polyester, water-repellent polyester	PI · PL · PM · PW
Polyester with nanofibre	PWA · PWB
PTFE membrane	PTF · PTG
Antistatic, antistatic PTFE membrane and nanofibre	ALU · ANT · APTF · AWB
Flame retardant	PFR · AFR

Filter temperature depends on flanges, gaskets and medium. Media codes and specifications: pages 9–11.

OV.660 / OV.750 / OVR.660 / OVR.750

Aftermarket oval cartridge for Donaldson

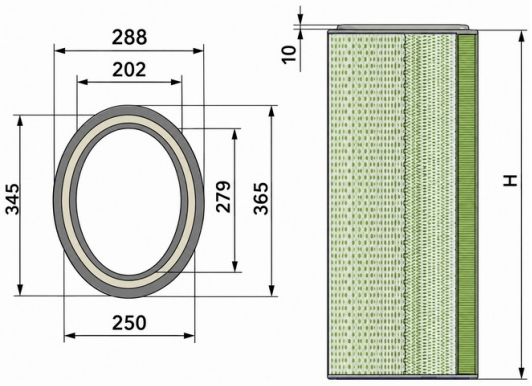



Code	H	Inner/outer mesh and retaining bands
OV.660	660	
OV.750	750	

Code	H	Inner and outer mesh
OVR.660	660	
OVR.750	750	

Flange	Galvanised steel
Mesh	Galvanised steel
Gasket	Elastomer/silicone
Temperature	Depends on the medium and compatible sealants and gaskets

References: OVR.660.18.WEB = Donaldson 2625112 / 2625115 - OVR.660.18.CS = 2627344
References: OV.660.09.PTF = Donaldson 2625174 / 2625117 - OV.660.09.PWB = 2625174 - OVR.660.09.APWB = Donaldson 2625175

AVAILABLE FILTER MEDIA

Polyester, water-repellent polyester	PI · PL · PM · PW
Polyester with nanofibre	PWA · PWB
PTFE membrane	PTF · PTG
Antistatic, antistatic PTFE membrane and nanofibre	ALU · ANT · APTF · AWB
Flame retardant	PFR · AFR

Filter temperature depends on flanges, gaskets and medium. Media codes and specifications: pages 9–11.

R1 / R2 / R3 / R4

Cylindrical cartridge with female threaded flange

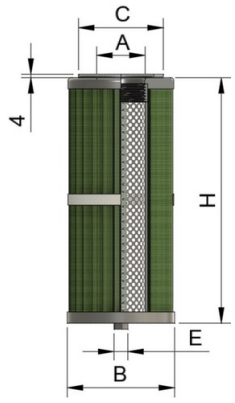



Code	ØA (thread size)		ØB	ØC	E	H min.	H max.
R1	RD58	x 4	115	110	0	150	1500
R2	RD72	x 5	120	110	M24	150	1500
R3	RD99	x 4	160	150	M24	150	1500
R4	RD99	x 4	220	185	M24	150	1500

Flange	Galvanised steel
Inner mesh	Galvanised steel
Gasket	Felt
Temperature	Depends on the medium and compatible sealants and gaskets

Code	ØA (thread size)		ØB	ØC	E	H min.	H max.
R1I	RD58	x 4	115	110	0	150	1500
R2I	RD72	x 5	120	110	M24	150	1500
R3I	RD99	x 4	160	150	M24	150	1500
R4I	RD99	x 4	220	185	M24	150	1500

Flange	Stainless steel
Inner mesh	Stainless steel
Gasket	Felt
Temperature	Depends on the medium and compatible sealants and gaskets

AVAILABLE FILTER MEDIA

Polyester, water-repellent polyester	PI · PL · PM · PW
Polyester with nanofibre	PWA · PWB
PTFE membrane	PTF · PTG
Antistatic, antistatic PTFE membrane and nanofibre	ALU · ANT · APTF · AWB
Flame retardant	PFR · AFR

Filter temperature depends on flanges, gaskets and medium. Media codes and specifications: pages 9–11.

RC2 / RC3

Conical cartridge with female threaded flange

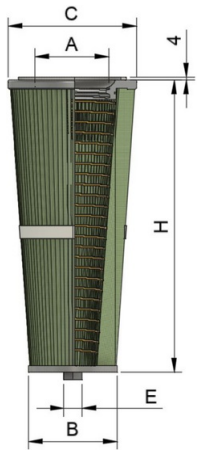



Code	ØA (thread size)		ØB	ØC	E	H min.	H max.
RC2	RD72	x 5	80	120	M24	400	1000
RC3	RD99	x 4	160	150	M24	150	1500

Flange	Galvanised steel
Inner mesh	Galvanised steel
Gasket	Felt
Temperature	Depends on the medium and compatible sealants and gaskets

Code	ØA (thread size)		ØB	ØC	E	H min.	H max.
RC2I	RD72	x 5	80	120	M24	400	1000
RC3I	RD99	x 4	160	150	M24	150	1500

Flange	Stainless steel
Inner mesh	Stainless steel
Gasket	Felt
Temperature	Depends on the medium and compatible sealants and gaskets

References: RC2 = Mahle 852 902 - 852 903 - 852 904 - 852 935

AVAILABLE FILTER MEDIA

Polyester, water-repellent polyester	PI · PL · PM · PW
Polyester with nanofibre	PWA · PWB
PTFE membrane	PTF · PTG
Antistatic, antistatic PTFE membrane and nanofibre	ALU · ANT · APTF · AWB

Filter temperature depends on flanges, gaskets and medium. Media codes and specifications: pages 9–11.

S1 / RWR1 / RWR2 / RWR3 / RWS1

Metal flange with male thread

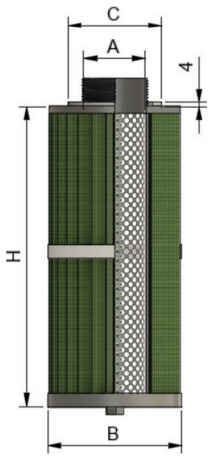



Code	ØA	ØB	ØC	H min.	H max.
S1	RD74	120	110	150	1500

Flange	Galvanised steel
Inner mesh	Galvanised steel
Gasket	Felt
Temperature	Depends on the medium and compatible sealants and gaskets

AVAILABLE FILTER MEDIA

Polyester, water-repellent polyester	PI · PL · PM · PW
Polyester with nanofibre	PWA · PWB
PTFE membrane	PTF · PTG
Antistatic, antistatic PTFE membrane and nanofibre	ALU · ANT · APTF · AWB

For high-temperature media, silicone- or epoxy-based sealants and gaskets are used.

Code	Filter holder
RWR1	RD58 for R1
RWR2	RD72 for R2-RC2
RWR3	RD99 for R3-RC3-R4
RWS1	RD74 for S1



Filter temperature depends on flanges, gaskets and medium. Media codes and specifications: pages 9–11.

SW.500 / SW.750 / SW.900

Aftermarket replacement for WAM KFES / WAMECO

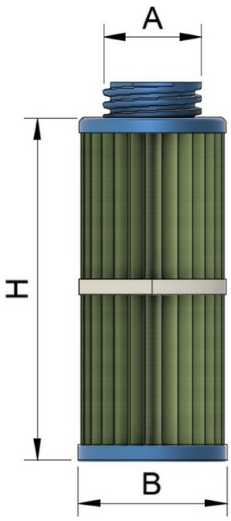



Code	ØA	ØB	H	Area
SW.500	RD98	142	500	1.0 m²
SW.750	RD98	142	750	1.5 m²
SW.900	RD98	142	900	1.8 m²

Flange	Soft polyurethane
Inner mesh	Polypropylene
Temperature	75°C. max.

AVAILABLE FILTER MEDIA

Polyester, water-repellent polyester	PI · PL · PM · PW
Polyester with nanofibre	PWA · PWB
PTFE membrane	PTF · PTG
Antistatic, antistatic PTFE membrane and nanofibre	ALU · ANT · APTF · AWB

Filter temperature depends on flanges, gaskets and medium. Media codes and specifications: pages 9–11.

WP

Aftermarket replacement for WAM KFNC / WAMFLO / HOPPERTOP

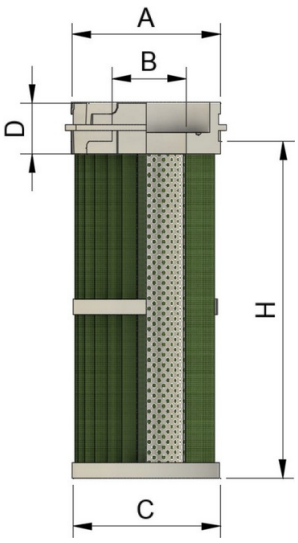



Code	ØA	ØB	ØC	D	H	Area
WP	143	78	140	50	500	1.0 m²
WP	143	78	140	50	750	1.5 m²
WP	143	78	140	50	900	1.8 m²

Flange/end cap	Plastic
Inner mesh	Polypropylene
Venturi (on request)	**Plastic**
Temperature	65°C. max.

AVAILABLE FILTER MEDIA

Polyester, water-repellent polyester	PI · PL · PM · PW
Polyester with nanofibre	PWA · PWB
PTFE membrane	PTF · PTG
Antistatic, antistatic PTFE membrane and nanofibre	ALU · ANT · APTF · AWB

Filter temperature depends on flanges, gaskets and medium. Media codes and specifications: pages 9–11.

ULM

Aftermarket replacement for Ulmatec

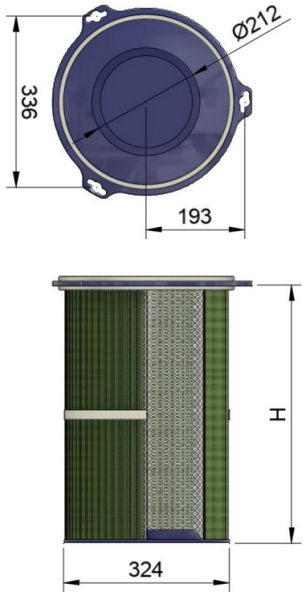



Code	H min.	H max.
ULM	600	1500

Flange	Painted galvanised steel
Inner mesh	Galvanised steel
Gasket	Elastomer/silicone
Temperature	Depends on the medium and compatible sealants and gaskets

AVAILABLE FILTER MEDIA

Polyester, water-repellent polyester	PI · PL · PM · PW
Polyester with nanofibre	PWA · PWB
PTFE membrane	PTF · PTG
Antistatic, antistatic PTFE membrane and nanofibre	ALU · ANT · APTF · AWB
Flame retardant	PFR · AFR

Filter temperature depends on flanges, gaskets and medium. Media codes and specifications: pages 9–11.

HUA

Aftermarket replacement for Jinan Huaxin

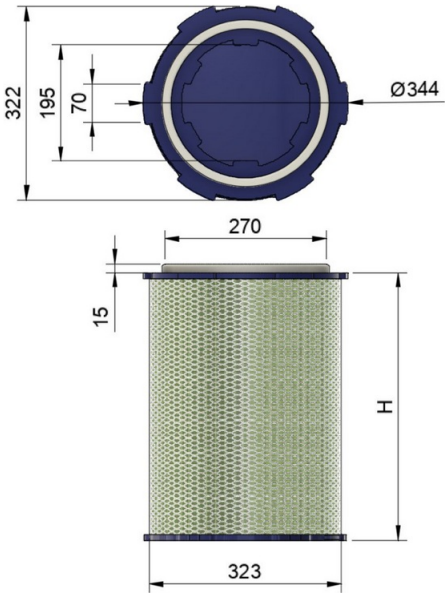



Code	H min.	H max.
HUA	600	1500

Flange	Plastic
Mesh	Galvanised steel
Gasket	Elastomer
Temperature	80°C. max.

AVAILABLE FILTER MEDIA

Cellulose, 80/20 blend, 80/20 with nanofibre	CP · CS · WEB
Polyester, water-repellent polyester	PI · PL · PM · PW
Polyester with nanofibre	PWA · PWB
PTFE membrane	PTF · PTG
Antistatic, antistatic PTFE membrane and nanofibre	ALU · ANT · APTF · AWB

Filter temperature depends on flanges, gaskets and medium. Media codes and specifications: pages 9–11.

VP

Aftermarket replacement for Dantherm, DISA, FMC/FMCZ, Nederman

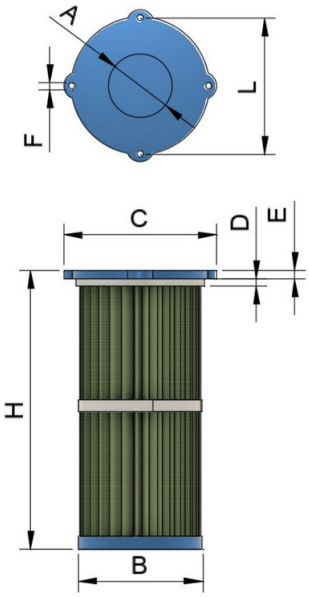



Code	ØA	ØB	ØC	D	E	ØF	L	H min.	H max.
VP	80	180	247	8	12	8	222	400	1600

Flange	Plastic
Inner mesh	Galvanised steel
Gasket	Elastomer/silicone
Temperature	80°C. max.

AVAILABLE FILTER MEDIA

Polyester, water-repellent polyester	PI · PL · PM · PW
Polyester with nanofibre	PWA · PWB
PTFE membrane	PTF · PTG
Antistatic, antistatic PTFE membrane and nanofibre	ALU · ANT · APTF · AWB
Flame retardant	PFR · AFR

Filter temperature depends on flanges, gaskets and medium. Media codes and specifications: pages 9–11.

ZEPP/ZEPG

Aftermarket conical cartridge for Zeppeling

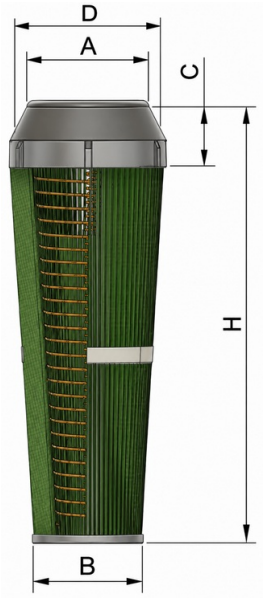



Code	ØA	ØB	C	D	H	Area
ZEPP.600	114	80	70	125	600	1 m^2
ZEPP.1000	114	80	70	125	1000	1.8 m^2
ZEPP.1200	114	80	70	125	1200	2.2 m^2
ZEPG.600	114	80	61	145	600	1.2 m^2
ZEPG.1000	114	80	61	145	1000	2.1 m^2
ZEPG.1200	114	80	61	145	1200	2.5 m^2

Flange	Plastic
Inner mesh	Galvanised steel / stainless steel
End cap	Plastic / stainless steel
Temperature	80°C. max.

AVAILABLE FILTER MEDIA

Polyester, water-repellent polyester	PI · PL · PM · PW
Polyester with nanofibre	PWA · PWB
PTFE membrane	PTF · PTG
Antistatic, antistatic PTFE membrane and nanofibre	ALU · ANT · APTF · AWB
Flame retardant	PFR · AFR

Filter temperature depends on flanges, gaskets and medium. Media codes and specifications: pages 9–11.

X2

Aftermarket replacement for TS-Filtersystem

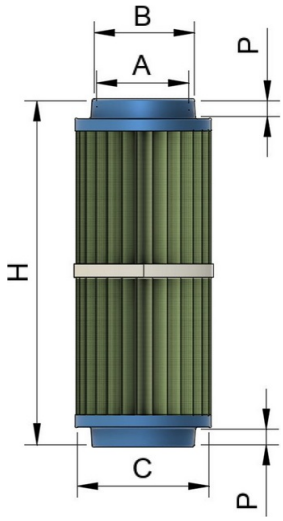



Code	ØA	ØB	ØC	P	H min.	H max.
X2	75	105	125	12	300	1000

Flange	Soft polyurethane
Temperature	65°C. max.

AVAILABLE FILTER MEDIA

Polyester, water-repellent polyester	PI · PL · PM · PW
Polyester with nanofibre	PWA · PWB
PTFE membrane	PTF · PTG
Antistatic, antistatic PTFE membrane and nanofibre	ALU · ANT · APTF · AWB
Flame retardant	PFR · AFR

Filter temperature depends on flanges, gaskets and medium. Media codes and specifications: pages 9–11.

IN / FCC52

Aftermarket replacement for Plymovent / Lincoln Electric

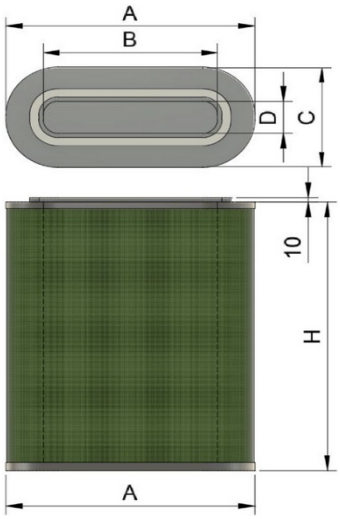

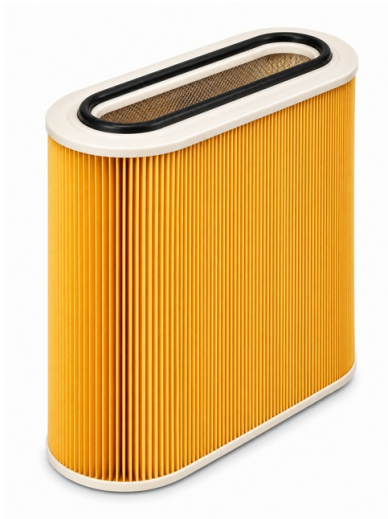

Code	A	B	C	D	H	Area
FCC52	535	390	235	90	620	18 m²

Flange	Plastic
Mesh	Galvanised steel
Gasket	Elastomer
Temperature	80°C. max.

References: LINCOLN ELECTRIC KP2752-16

AVAILABLE FILTER MEDIA

Cellulose, 80/20 blend, 80/20 with nanofibre	CY · CP · CS · WEB
Polyester, water-repellent polyester	PI · PL · PM · PW
Polyester with nanofibre	PWA
PTFE membrane	PTF · PTG
Antistatic, antistatic PTFE membrane and nanofibre	ALU · ANT · APTF · AWB

Filter temperature depends on flanges, gaskets and medium. Media codes and specifications: pages 9–11.

IN / FCC52

Ref. 2653254470: aftermarket replacement for Atlas Copco

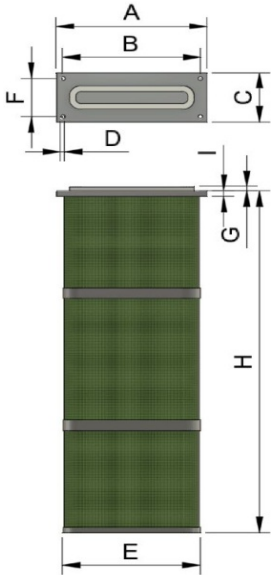



Code	A	B	C	ØD	E	F	G	I	H
IN	240	220	70	5,5	220	90	18	10	800

Flange	Plastic
Mesh	Galvanised steel
Gasket	Elastomer
Temperature	80°C. max.

AVAILABLE FILTER MEDIA

Polyester, water-repellent polyester	PI · PL · PM · PW
Polyester with nanofibre	PWA · PWB
PTFE membrane	PTF · PTG
Antistatic, antistatic PTFE membrane and nanofibre	ALU · ANT · APTF · AWB
Flame retardant	PFR · AFR

Filter temperature depends on flanges, gaskets and medium. Media codes and specifications: pages 9–11.

FCC150

Aftermarket replacements for Plymovent / Lincoln Durafilter

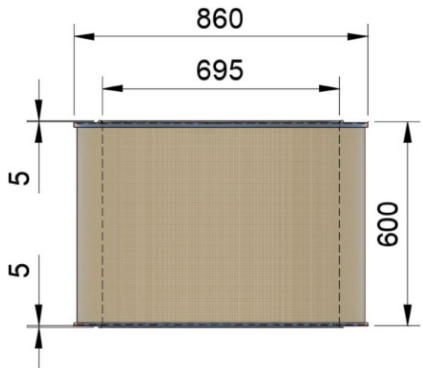



Code	Area
FCC150	75 m²

Flange	Plastic
Mesh	Galvanised steel
Gasket	Elastomer
Temperature	65°C. max.

AVAILABLE FILTER MEDIA

Cellulose, 80/20 blend, 80/20 with nanofibre	CY · CP · CS · WEB
Polyester, water-repellent polyester	PI · PL · PM · PW
Polyester with nanofibre	PWA · PWB
PTFE membrane	PTF · PTG
Antistatic, antistatic PTFE membrane and nanofibre	ALU · ANT · APTF · AWB

Filter temperature depends on flanges, gaskets and medium. Media codes and specifications: pages 9–11.

FCC30

Aftermarket replacements for Plymovent / Lincoln Durafilter

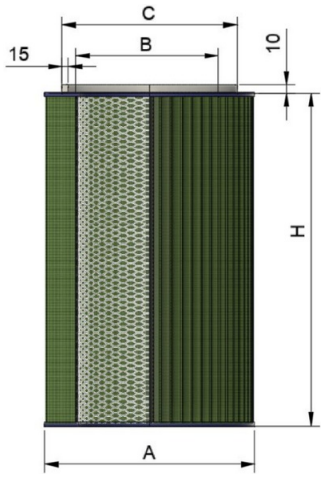



Code	ØA	ØB	ØC	H	Area
FCC30	480	390	435	600	30 m²

Flange	Plastic
Mesh	Galvanised steel
Gasket	Elastomer
Temperature	65°C. max.

AVAILABLE FILTER MEDIA

Cellulose, 80/20 blend, 80/20 with nanofibre	CY · CP · CS · WEB
Polyester, water-repellent polyester	PI · PL · PM · PW
Polyester with nanofibre	PWA · PWB
PTFE membrane	PTF · PTG
Antistatic, antistatic PTFE membrane and nanofibre	ALU · ANT · APTF · AWB

Filter temperature depends on flanges, gaskets and medium. Media codes and specifications: pages 9–11.

TRX

Double-conical replacement cartridge

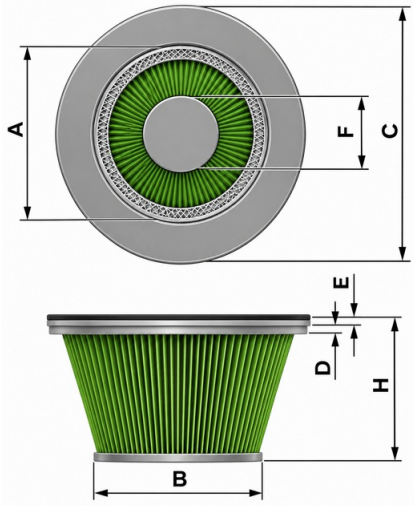



Code	ØA	ØB	ØC	D	E	ØF	H min.	H max.
TRX	430	465	574	10	12	250	400	1600

Flange	Plastic
Mesh	Metal
Gasket	Elastomer/silicone
Temperature	80°C. max.

AVAILABLE FILTER MEDIA

Cellulose, 80/20 blend, 80/20 with nanofibre	CY · CP · CS · WEB
Polyester, water-repellent polyester	PI · PL · PM · PW
Polyester with nanofibre	PWA · PWB
PTFE membrane	PTF · PTG
Antistatic, antistatic PTFE membrane and nanofibre	ALU · ANT · APTF · AWB

Filter temperature depends on flanges, gaskets and medium. Media codes and specifications: pages 9–11.

MT1 / MT2

Cartridge with six-bolt mounting

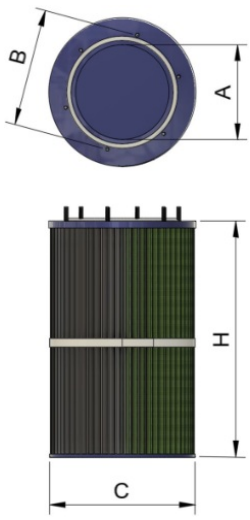



Code	ØA	ØB	ØC	H min.	H max.	Ø VITI
MT1	210	260	324	300	1500	M8
MT2	145	208	225	300	1500	M6

Flange	Plastic
Mesh	Galvanised steel
Gasket	Elastomer
Temperature	80°C. max.

AVAILABLE FILTER MEDIA

Cellulose, 80/20 blend, 80/20 with nanofibre	CY · CP · CS · WEB
Polyester, water-repellent polyester	PI · PL · PM · PW
Polyester with nanofibre	PWA · PWB
PTFE membrane	PTF · PTG
Antistatic, antistatic PTFE membrane and nanofibre	ALU · ANT · APTF · AWB

Filter temperature depends on flanges, gaskets and medium. Media codes and specifications: pages 9–11.

FCC50

Aftermarket replacements for Plymovent / Lincoln

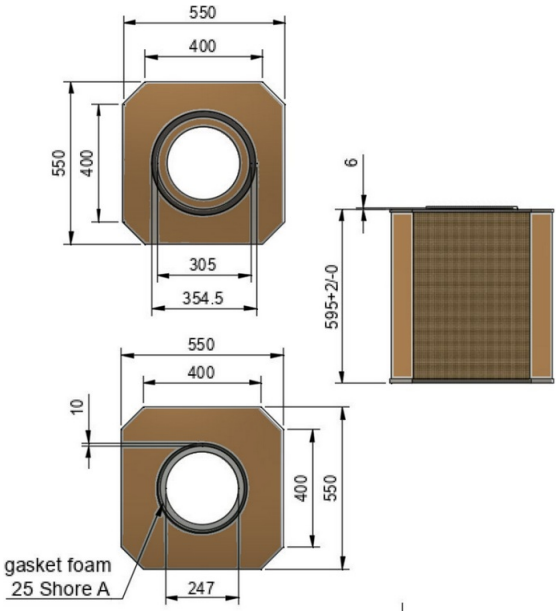



Code	Filter area
FCC50	50 m²

Flange	Cellulose
Gasket	Elastomer
Temperature	50°C. max.

References: Plymovent Durafilter FCC-50 9850060050, LINCOLN 'K1673-1

AVAILABLE FILTER MEDIA

Cellulose / 80/20 blend	CY · CP · CS · WEB

Filter temperature depends on flanges, gaskets and medium. Media codes and specifications: pages 9–11.

HS1 / HS2 / HS3 / HS4 / HS5

Top flange mounting system

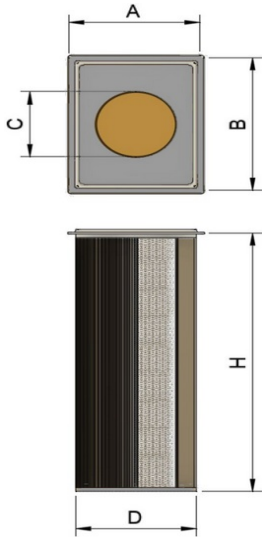



Code	A	B	ØC	ØD	H min.	H max.
HS1	362	400	212	324	600	1500
HS2	410	410	212	324	600	1500
HS3	396	435	240	350	600	1500
HS4	450	510	290	406	600	1500
HS5	525	525	315	410	600	1500

Flange	Galvanised steel
Mesh	Galvanised steel
Gasket	Elastomer/silicone
Temperature	Depends on filter medium, sealants and gaskets

AVAILABLE FILTER MEDIA

Cellulose, 80/20 blend, 80/20 with nanofibre	CY · CP · CS · WEB
Polyester, water-repellent polyester	PI · PL · PM · PW
Polyester with nanofibre	PWA · PWB
PTFE membrane	PTF · PTG
Antistatic, antistatic PTFE membrane and nanofibre	ALU · ANT · APTF · AWB

Filter temperature depends on flanges, gaskets and medium. Media codes and specifications: pages 9–11.

HSE

Aftermarket replacement for Farr Gold Series

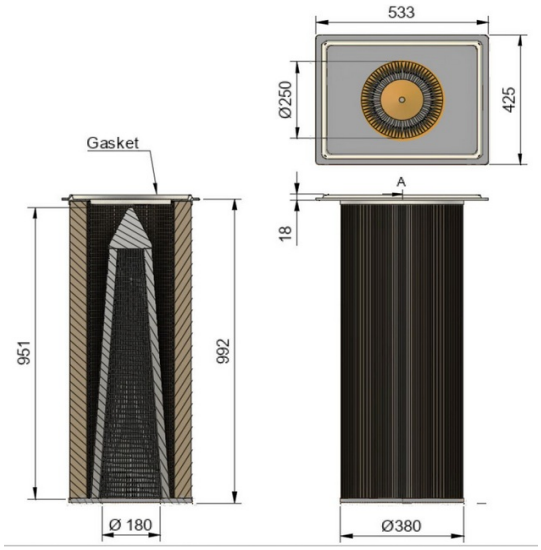



Code	Filter area
HSE	31 m²

Flange	Galvanised steel
Mesh	Galvanised steel
Gasket	Elastomer/silicone
Temperature	Depends on filter medium, sealants and gaskets

References: 211497-001 Gold Cone Cartridge 211497-002 Gold Cone Cartridge 211497-004 Gold Cone Cartridge 211497-005 Gold Cone Cartridge 211831-001 Gold Cone Cartridge 325325-003 Gold Cone Cartridge 325325-004 Gold Cone Cartridge GS-SY-325 Synthetic GS-XS- 325 eXtreme Synthetic GS-GR-325 Standard Green GS-XC-325 eXtreme Carbon Impregnated GS-XF-325 eXtreme Fire Retardant GS-CB-325 Carbon Impregnated GS-FR-325 Fire Retardant GS-XG-325 eXtreme Green

AVAILABLE FILTER MEDIA

Cellulose, 80/20 blend, 80/20 with nanofibre	CY · CP · CS · WEB
Polyester, water-repellent polyester	PI · PL · PM · PW
Polyester with nanofibre	PWA · PWB
PTFE membrane	PTF · PTG
Antistatic, antistatic PTFE membrane and nanofibre	ALU · ANT · APTF · AWB

Filter temperature depends on flanges, gaskets and medium. Media codes and specifications: pages 9–11.

Polygonal filter elements

Industrial dust collection solutions



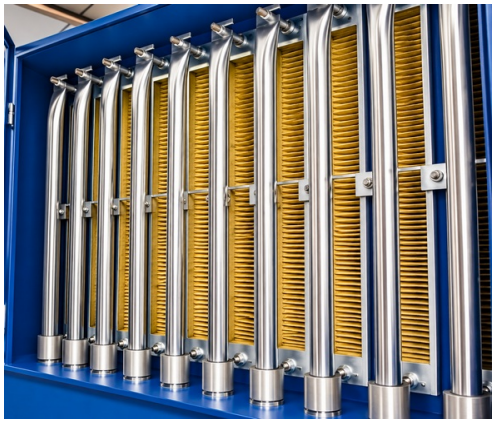



APPLICATIONS

Fumes and dust from laser and plasma cutting.
Pneumatic conveying.
Cement plants, pharmaceutical and food industries.

For applications up to 80 °C.

Compatible with Keller, Camfil, Donaldson, Trumpf, WAM and Herding equipment.

AVAILABLE FILTER MEDIA

Polyester	PL · PW
Polyester with nanofibre	PWB
PTFE membrane	PTF · PTG
Antistatic	ALU · APTF · AWB

Efficiency classes and media specifications: pages 9–11.

K.550 / K.750 / K.950

Aftermarket polygonal filter panel for WAM

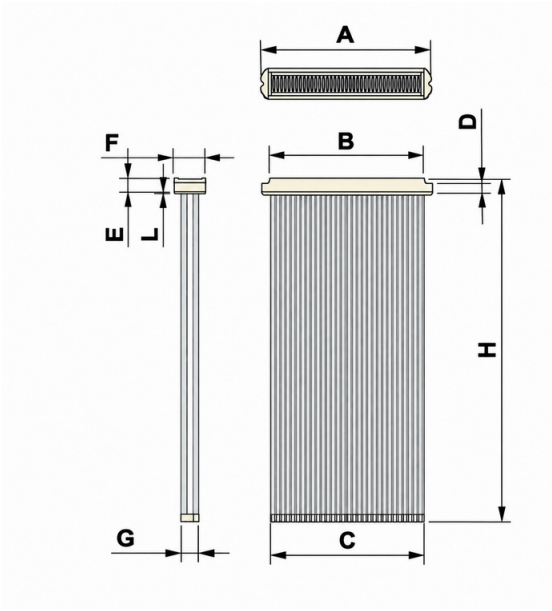



Code	A	B	C	D	E	F	G	I	L	H	Area (m^2)
K.550	462	418	425	20	35	85	50	12	6	500	2 m^2
K.750	462	418	425	20	35	85	50	12	6	750	3 m^2
K.950	462	418	425	20	35	85	50	12	6	900	3.6 m^2

Flange and end cap	Plastic
Gasket	EPDM elastomer
Temperature	80°C. max.

References: WAM KFEW, WAMAIR,WAMFLO,SILOTOP

AVAILABLE FILTER MEDIA

Polyester, water-repellent polyester	PL · PW
Polyester with nanofibre	PWB
PTFE membrane	PTF · PTG
Antistatic, antistatic PTFE membrane and nanofibre	ALU · APTF · AWB

Filter temperature depends on flanges, gaskets and medium. Media codes and specifications: pages 9–11.

PAP.1045 / PAP.1200

Aftermarket replacements for Trumpf and Herding dust collectors

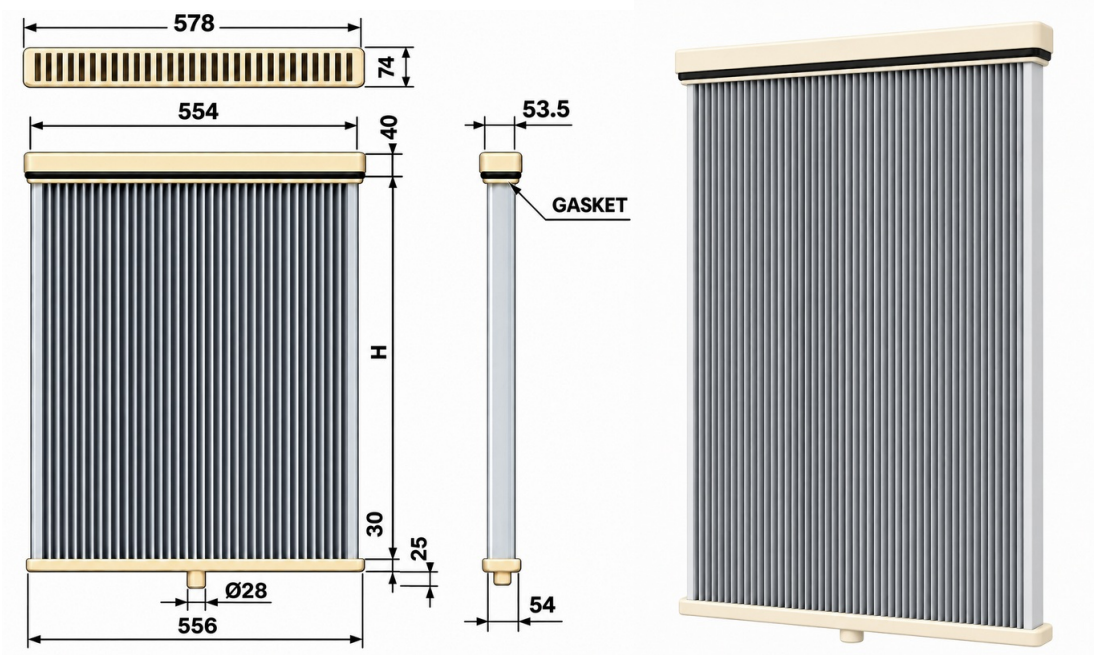

Code	Area (m²)	H
PAP.1045	5 m²	1045
PAP.1200	6 m²	1230

Flange	Plastic
Gasket	EPDM elastomer
Temperature	80°C. max.

References: PAP.1045.PTG = Trumpf 0345064, 0344014, 0346113, 0346118, 0359584, 0359585, 0359586, 345064, 344014, 346113, 346118, 359584, 359585, 359586,1533834, 2625632, 2306137, Handte MF-L 20/25/30/40/50

AVAILABLE FILTER MEDIA

Polyester, water-repellent polyester	PL · PW
Polyester with nanofibre	PWB
PTFE membrane	PTF · PTG
Antistatic, antistatic PTFE membrane and nanofibre	ALU · APTF · AWB

Filter temperature depends on flanges, gaskets and medium. Media codes and specifications: pages 9–11.

PAT1.600 / PAT4.890 / PAT5.950 / PAT5.1260

Aftermarket replacements for Trumpf, Camfil and Keller dust collectors

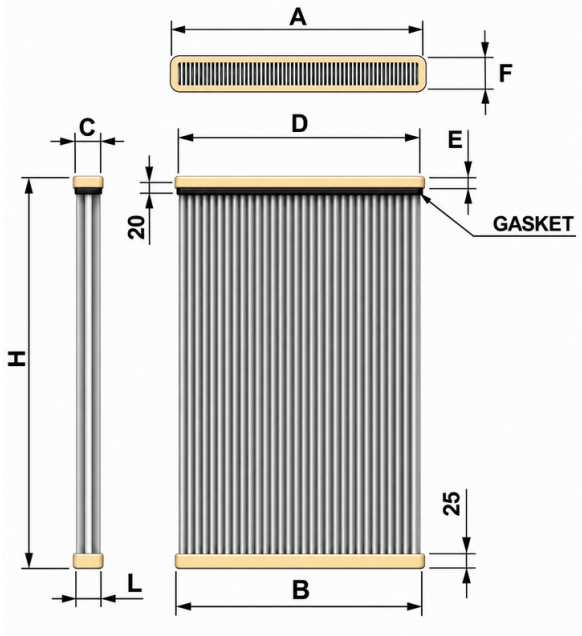

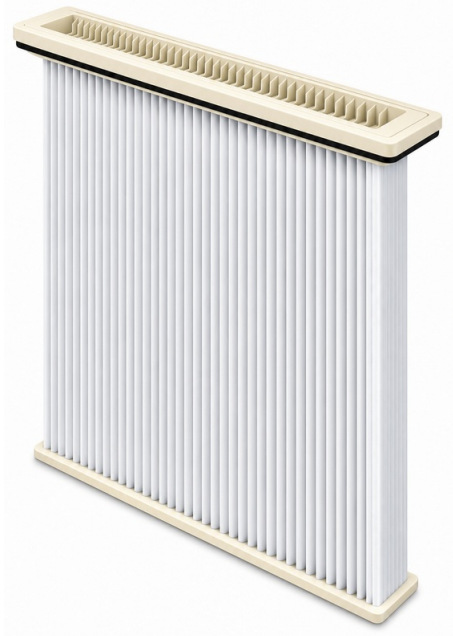

Code	A	B	C	D	E	F	L	Pleats	Area (m^2)	H
PAT1.600	518	494	32	494	16	53	32	60	1.1 m^2	600
PAT4.890	685	650	54	664	40	70	53	63	5.4 m^2	890
PAT5.950	1054	980	54	990	40	80	53	65	6 m^2	950
PAT5.1260	1054	980	54	990	40	80	53	65	8 m^2	1260

Flange	Plastic
Gasket	EPDM elastomer
Temperature	80°C. max.

References: PAT1.600.PTG = TRUMPF 0139809 - B17/8/1 0386275/0384514 Handte/Camfil MF-L17/8/1 PAT4.890.PTG TRUMPF 2305512 Handte/Camfil MF-L 5.4 A2 PAT5.950.PTG = TRUMPF 0146122 Keller Vario T1.5 PAT5.1260.PTG = TRUMPF 0340484 Keller Vario T2.5 & T3.0:

AVAILABLE FILTER MEDIA

Polyester, water-repellent polyester	PL · PW
Polyester with nanofibre	PWB
PTFE membrane	PTF · PTG
Antistatic, antistatic PTFE membrane and nanofibre	ALU · APTF · AWB

Filter temperature depends on flanges, gaskets and medium. Media codes and specifications: pages 9–11.

PAT1 / PAT2 / PAT3 / PAT6 / PAT8

Aftermarket replacements for Donaldson Unicell and Excel Style

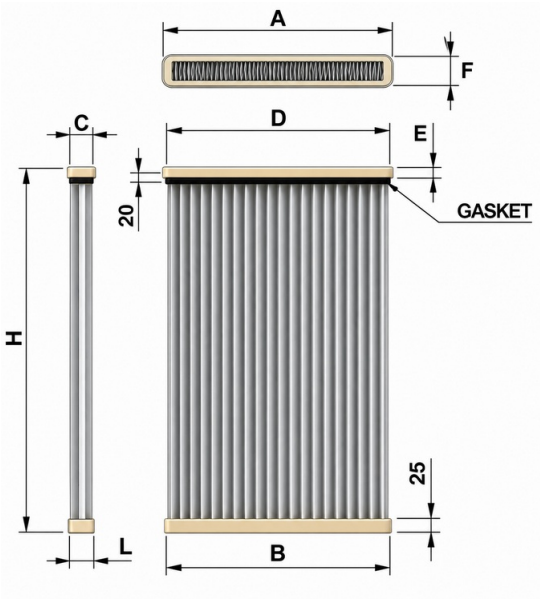



Code	A	B	C	D	E	F	L	Pleats	H min.	H max.
PAT1	518	494	32	494	16	53	32	60	500	1500
PAT2	818	790	34	8	16	53	34	53	500	1500
PAT3	500	470	74	470	16	98	74	42	500	1500
PAT6	495	475	28	480	16	47	28	43	500	1500
PAT8	495	455	28	480	16	56	28	43	500	1500

Flange	Plastic
Gasket	EPDM elastomer
Temperature	80°C. max.

References: PAT3.600.PWB = 1A63399011 - PAT3.800.PWB = 1A6339013/015/2626347/2626834/2627352 - PAT3.800.PTG = 1A6339006A - PAT3.800.APTG = 1A6339007 - PAT3.800.APWB = 1A6339014/016/2626835/2627360 PAT3.1000.APWB = 1A64399012/14/16/2626833/2627361 - PAT3.1000.PWB = 1A64399013/15/2627353 PAT3.1000.PTG = 1A64399006A - PAT3.1000.APTG = 1A64399007 - PAT3.1200.APWB = 2627362 PAT6.1500.PL = 1A61399000 - PAT6.1500.ANT = 1A61399001 - PAT6.1130.ANT = 2626393 INFASTAUB PAT8.1000.PTG = 2627269

AVAILABLE FILTER MEDIA

Polyester, water-repellent polyester	PL · PW
Polyester with nanofibre	PWB
PTFE membrane	PTF · PTG
Antistatic, antistatic PTFE membrane and nanofibre	ALU · APTF · AWB

Filter temperature depends on flanges, gaskets and medium. Media codes and specifications: pages 9–11.

PAT3X.1000 / PAT4X.1225 / PAT9.1000 / PAT9.1255

Aftermarket replacement for Vanterm dust collectors

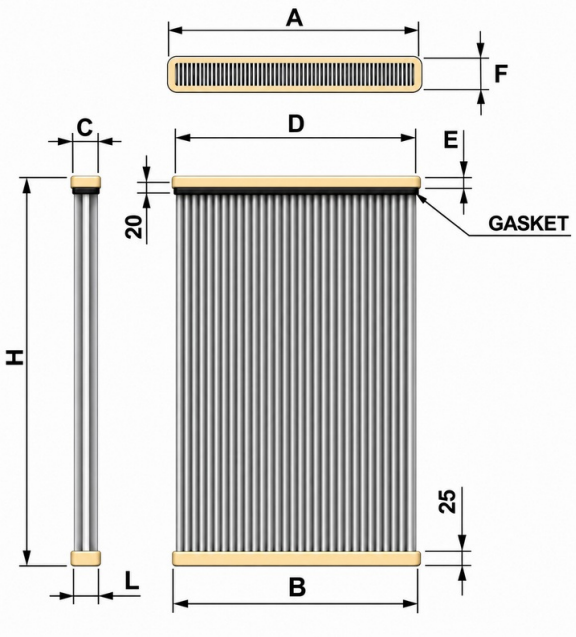



Code	A	B	C	D	E	F	L	Pleats	Area (m^2)	H
PAT3X.1000	504	470	74	480	15	94	68	44	6.5 m^2	1000
PAT4X.1225	676	650	68	655	15	94	68	68	10.2 m^2	1225
PAT9.1000	740	708	80	720	30	102	73	70	7.2 m^2	1000
PAT9.1255	740	708	80	720	30	102	73	70	8.6 m^2	1255

Flange	Plastic
Gasket	EPDM elastomer
Temperature	80°C. max.

References: PAT3X.1000.PTG = VANTERM PL-2500 PAT4X.1225.PTG = VANTERM PL 4000 Alpha, Durma, Mitsubishi lasers

AVAILABLE FILTER MEDIA

Polyester, water-repellent polyester	PL · PW
Polyester with nanofibre	PWB
PTFE membrane	PTF · PTG
Antistatic, antistatic PTFE membrane and nanofibre	ALU · APTF · AWB

Filter temperature depends on flanges, gaskets and medium. Media codes and specifications: pages 9–11.

PAF1.1045

Aftermarket replacement for Trumpf

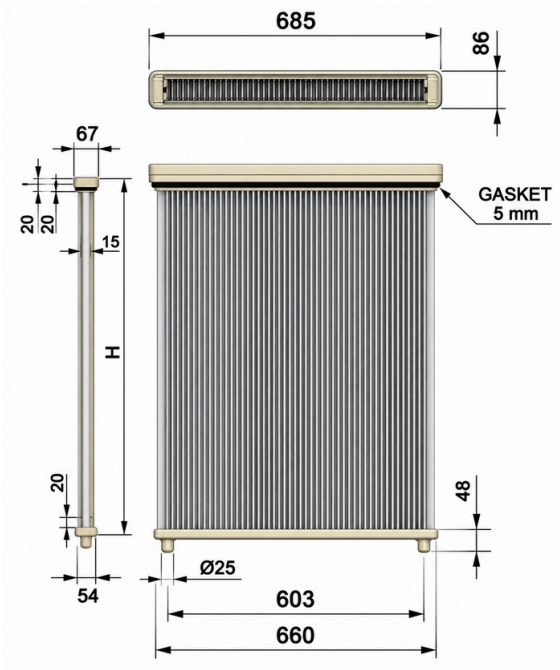



Code	Pleats	Area (m²)	H
PAF1.1045	63	6.2 m²	1045

Flange	Plastic
Gasket	EPDM elastomer
Temperature	80°C. max.

References: PAF.1045.PTG = TRUMPF 0380757

AVAILABLE FILTER MEDIA

Polyester, water-repellent polyester	PL · PW
Polyester with nanofibre	PWB
PTFE membrane	PTF · PTG
Antistatic, antistatic PTFE membrane and nanofibre	ALU · APTF · AWB

Filter temperature depends on flanges, gaskets and medium. Media codes and specifications: pages 9–11.

PAT7.1100

Aftermarket replacement for Trumpf

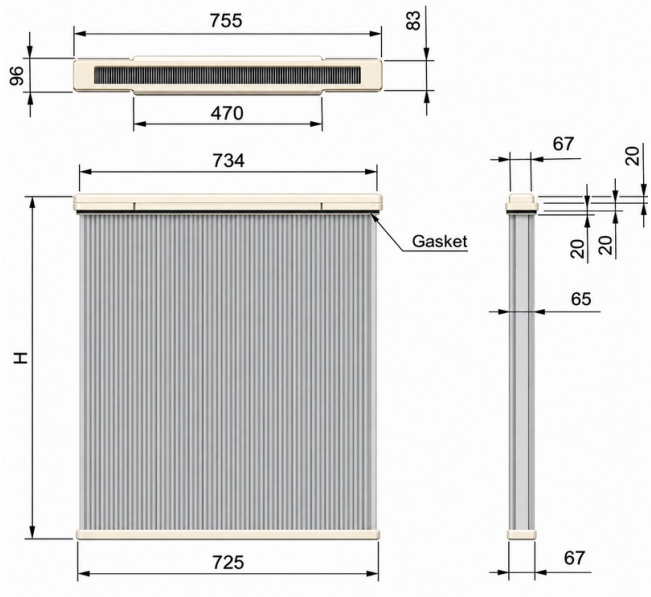



Code	Pleats	Area (m²)	H
PAT7.1100	64	7.4 m²	1100

Flange	Plastic
Gasket	Flat EPDM gasket
Temperature	80°C. max.

References: PAT7.1100.PTG = Handte/Camfil MF-8.4/8.5/8.6 TRUMPF 2260691

AVAILABLE FILTER MEDIA

Polyester, water-repellent polyester	PL · PW
Polyester with nanofibre	PWB
PTFE membrane	PTF · PTG
Antistatic, antistatic PTFE membrane and nanofibre	ALU · APTF · AWB

Filter temperature depends on flanges, gaskets and medium. Media codes and specifications: pages 9–11.

PAI1 / PAI2 / PAI3 / PAI4

Aftermarket replacement for Herding and Keller

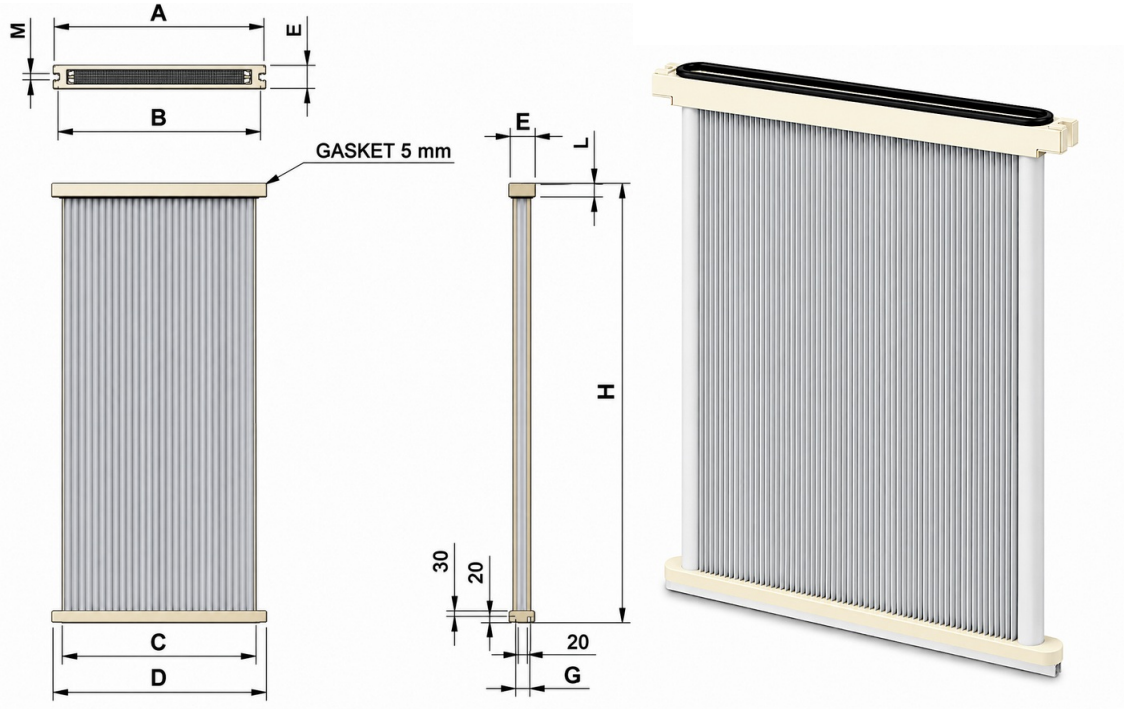

Code	A	B	C	D	E	G	L	M	H min.	H max.
PAI1	1050	1030	955	1040	61	52	40	15	500	1500
PAI2	737	696	650	650	80	52	40	22	500	1500
PAI3	570	550	495	495	80	52	40	17	500	1500
PAI4	725	705	680	680	61	52	40	22	500	1500

Flange	Plastic
Gasket	EPDM elastomer
Temperature	80°C. max.

References: PAI1.1555.PTG = Donaldson 2627127

AVAILABLE FILTER MEDIA

Polyester, water-repellent polyester	PL · PW
Polyester with nanofibre	PWB
PTFE membrane	PTF · PTG
Antistatic, antistatic PTFE membrane and nanofibre	ALU · APTF · AWB

Filter temperature depends on flanges, gaskets and medium. Media codes and specifications: pages 9–11.

PAI3S / PAI3L

Aftermarket replacement for Herding and Keller

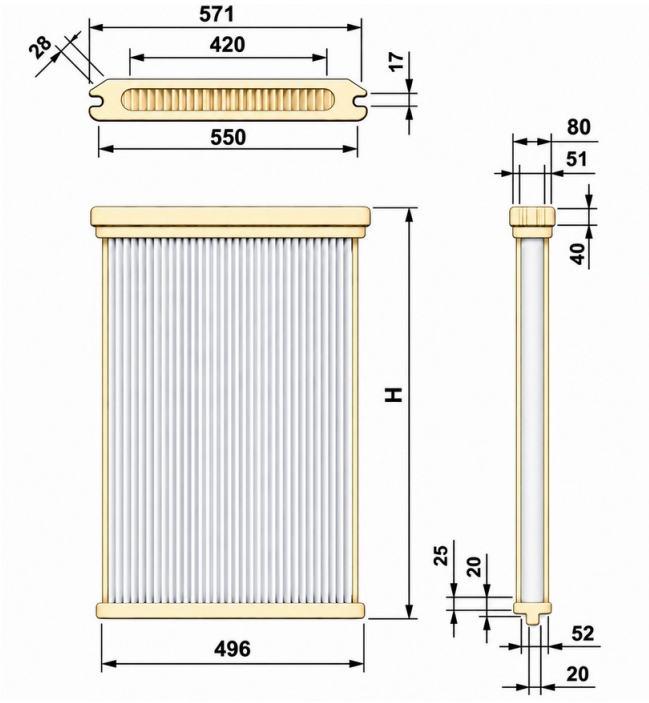



Code	Pleat count	H min.	H max.	Gasket
PAI3S	40	500	1500	Upper
PAI3L	40	500	1500	Lower

Flange	Plastic
Gasket	EPDM elastomer
Temperature	80°C. max.

References: PAI1.1555.PTG = Donaldson 2627127

AVAILABLE FILTER MEDIA

Polyester, water-repellent polyester	PL · PW
Polyester with nanofibre	PWB
PTFE membrane	PTF · PTG
Antistatic, antistatic PTFE membrane and nanofibre	ALU · APTF · AWB

Filter temperature depends on flanges, gaskets and medium. Media codes and specifications: pages 9–11.

PAD3 / PAD4 / PAD5

Aftermarket replacement for Donaldson, Herding and Keller

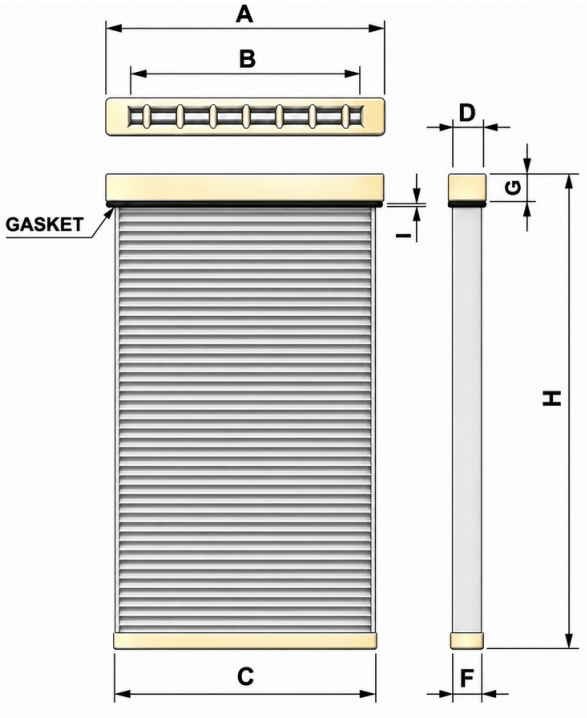



Code	A	B	C	D	F	G	I	H min.	H max.
PAD3	495	435	440	64	42	40	10	500	1500
PAD4	1020	970	975	100	75	30	10	500	1500
PAD5	720	670	675	100	75	30	10	500	1500

Flange	Plastic
Gasket	EPDM elastomer
Temperature	80°C. max.

AVAILABLE FILTER MEDIA

Polyester, water-repellent polyester	PL · PW
Polyester with nanofibre	PWB
PTFE membrane	PTF · PTG
Antistatic, antistatic PTFE membrane and nanofibre	ALU · APTF · AWB

Filter temperature depends on flanges, gaskets and medium. Media codes and specifications: pages 9–11.